## GENERAL NOTES

1. THE DESIGN/UPRIGHT POST HEIGHT IS FROM THE CENTER OF THE TRUSS/ARM TO THE BOTTOM OF THE BASE PLATE. THE GAP BETWEEN THE BOTTOM OF THE BASE PLATE AND THE TOP OF FOUNDATION IS NOT CONSIDERED IN THE HEIGHT CALCULATIONS. THIS REQUIRED GAP BETWEEN BASE AND FOUNDATION IS NOTED AS "BOLT DIAMETER PLUS 1" MAX" ON ALL DESIGN AND ERECTION DRAWINGS. NOTE THE AASHTO MAXIMUM LIMIT IS (2) BOLT DIAMETERS.
2. ANCHOR BOLTS – ROD = ASTM F1554, GRADE 55, S1
   – WASHERS = ASTM F436
   – NUTS = ASTM A563, GR DH OR A194, GR 2H
3. PIPE – STEEL = ALL PIPE SHALL MEET THE FOLLOWING SPECIFICATIONS WHICH COMPLY TO THE PROPERTIES OF 52 KSI MINIMUM YIELD, 60 KSI MINIMUM ULTIMATE TENSILE, MINIMUM ELONGATION EQUAL TO 20% IN 2 INCHES, AND YIELD STRENGTH NOT TO EXCEED 82 KSI WITHOUT APPROVAL OF THE ENGINEER; ASTM A500 GR B &/or C ASTM A53 GR A &/or B, ASTM A252 GR 2, or 3, & API 5L X42 through X80
   – ALUMINUM = 6061, T6
4. PLATE – STEEL, 3/16" OR GREATER = ASTM A709, GR 50
   – STEEL, 1/8" OR LESS = ASTM A1011, TYPE 1 MINIMUM
   – STEEL, GAUGE = ASTM A1011, TYPE 1 MINIMUM
5. BAR – STEEL = ASTM A36 MINIMUM
6. WIDE FLANGE – STEEL = ASTM A992
7. CHANNEL – STEEL = ASTM A36 MINIMUM
8. ANGLE – STEEL = ASTM A36 MINIMUM
   – ALUMINUM = 6061, T6
9. REBAR – STEEL = ASTM A706, GR 60 (RUNGS)
10. GRATING – STEEL, GRIP STRUT OR EQUAL = ASTM A1011, TYPE 1 MINIMUM
11. HARDWARE – BOLTS, PRIMARY = ASTM F3125 GR A325 (UN)
    – BOLTS, SECONDARY = ASTM A307
    – U-BOLTS = MEET OR EXCEED ASTM A307
    – WASHERS, FLAT = ASTM F436 (UN)
    – WASHERS, LOCK = ANSI B18.21.1 (UN)
    – WASHERS, DTI = F959
    – NUTS – ASTM A563, GR DH OR A194, GR 2H
12. GALVANIZING – STRUCTURAL = ASTM A123
    – HARDWARE = ASTM A153
13. POLE CAPS – ALUMINUM ALLOY SAND CASTING = 356-F
14. SADDLE SHIMS – ALUMINUM = 356-T6
15. WELDING – AWS SPEC D1.1, LATEST REV
16. ALL PIPE SIZES ARE OUTSIDE DIAMETER
17. ALL WELDS TO BE 3/16 FILLET UNLESS NOTED
18. WELDS INSPECTION NOTES ARE AS FOLLOWS:
    18.1 ALL WELDS SHALL BE VISUALLY INSPECTED (VT)
    18.2 FULL PENETRATION WELDS AT SHOP SPLICES WILL BE 100% (UT) TESTED FOR MATERIAL GREATER THAN OR EQUAL TO 0.25" AND (MT) LESS THAN 0.25"
    18.3 FULL PENETRATION WELDS AT BASE PLATES AND MAST ARMS END PLATES WITH 6" DIAMETER AND GREATER ARMS REQUIRE (UT) INSPECTION. IF THE SPECIFICATIONS CALLS FOR FATIGUE DESIGN MUST BE (UT) AFTER GALVANIZE FOR TOE CRACKS
    18.4 PARTIAL PENETRATION GROOVE AND FILLET WELDS AT TUBE TO BASE PLATE CONNECTIONS REQUIRE A RANDOM SAMPLE OF 25% OF THE STRUCTURES WITH (MT) OF FULL LENGTH OF WELD. (EX: JOB OF 2 DOUBLE-POLED UPRIGHTS WOULD CONSIST OF ONE POST OF ONE UPRIGHT WHEREAS ONE POST UPRIGHT WOULD REQUIRE FULL LENGTH OF WELD TESTED)

## FOUNDATION NOTES

1. CONCRETE TO BE CLASS "3000" AND f'c=3000 PSI
2. REINFORCING TO BE ASTM – A706, GRADE 60, DEFORMED, Fy = 60 KSI, fs = 24 KSI
3. REINFORCING TO BE TIED SUFFICIENTLY TO RETAIN ITS PROPER SHAPE DURING PLACEMENT.
4. REINFORCING TO BE HOOKED OR BENT PER ACI CODE.
5. CONTRACTOR TO PROVIDE CONDUIT IN FOOTING AS NECESSARY FOR ELECTRICAL SERVICE.
6. SEE STRUCTURE ERECTION DRAWINGS FOR FOOTING ELEVATIONS & ANCHOR BOLT MARKS, QUANTITIES, & SPACING. ALL ANCHOR BOLTS ARE TO BE SET USING SUPPLIED ANCHOR TEMPLATES AND SOLE PLATES.
7. CONTRACTOR SHALL BACK FILL AS NECESSARY TO COVER FOUNDATION.
8. ALL BACK FILL MUST ACHIEVE 95% COMPACTION.
9. CONSTRUCTIONS JOINT ARE ALLOWED WITH FOLLOWING REQUIREMENTS, UNLESS NOTED ON FOUNDATIONS DRAWINGS
   9.1 FOR CYLINDRICAL FOOTINGS, C.J. MUST BE LOCATED AT A MINIMUM OF 4'-3 FROM THE TOP OF THE FOOTING TO ENSURE ANCHORS ARE LOCATED IN FINAL POUR. IF A GRADE BEAM IS USED, ALL BEAMS GREATER THAN THE MINIMUM CAN BE LOCATED AT BEAM TO CYLINDER JOINT UNLESS OTHERWISE NOTED ON THE FOUNDATION DRAWINGS.
   9.2 FOR SPREAD FOOTINGS, C.J. MUST BE LOCATED AT A MINIMUM OF 4'-3 FOR THE TOP OF FOOTING FOR ALL PEDESTALS GREATER THAN 4'-0. JOINTS ARE ALLOWED AT THE PEDESTAL TO PAD LOCATION.
   9.3 ALL CONSTRUCTION JOINT SURFACES MUST BE ROUGH AND CLEAR OF ANY LOOSE OR FOREIGN MATERIAL. PRIOR TO THE PLACEMENT OF FRESH CONCRETE, JOINT SURFACES MUST BE THOROUGHLY WETTED. (USE A BONDING AGENT IF REQ'D BY SPECIFICATIONS)
10. IT IS THE CONTRACTORS RESPONSIBILITY TO INSTALL FOUNDATIONS IN ACCORDANCE WITH SPECIFICATION AND PROPER CONSTRUCTION METHODS.
11. ON CYLINDRICAL FOOTING WHERE A SONOTUBE IS EITHER NOT AVAILABLE OR FEASIBLE, THE TOP PORTION OF THE CYLINDER CAN BE FORMED AS A SQUARE EQUAL TO THE DESIGNED CYLINDER DIAMETER. THE SQUARE FORM MUST START AT LEAST 6 INCHES BELOW GROUND ON THE LOWEST SIDE OF THE FOUNDATION.
12. ON CYLINDRICAL FOOTING WHERE A GRADE BEAM IS USED, THE STIRRUPS USED IN THE BEAM MAY BE SHIFTED TO CLEAR OTHER CYLINDRICAL REINFORCEMENT AND/OR ANCHOR BOLTS AS NECESSARY. NOTE: BE SURE TO MAINTAIN THE 12" MAXIMUM SPACING ON THE STIRRUPS BETWEEN THE (2) CYLINDERS AS SHOWN ON THE DRAWINGS.

INFRASTRUCTURE CONSULTING & ENGINEERING

SHOP DRAWING REVIEW

REVIEW IS FOR GENERAL COMPLIANCE WITH CONTRACT DOCUMENTS. NO RESPONSIBILITY IS ASSUMED FOR CORRECTNESS OF DIMENSIONS OR DETAILS.

APPROVED ☒
APPROVED AS NOTED ☐
REVISE AND RESUBMIT ☐
REJECTED ☐

BY: EJL DATE: 02/20/2024

ALL GROUPS

AASHTO 6th Edition Spec's

SEALED BY:

SOUTH CAROLINA PROFESSIONAL ENGINEER
DAVID A LALLONE
No. 38665

Sep 8 2023

walpar
A valmont COMPANY

POST OFFICE BOX 28650
BIRMINGHAM ALABAMA 35228
4200 JEFFERSON AVENUE
BIRMINGHAM ALABAMA 35221
PHONE (205)-925-4990
FAX (205) 925-7273

| | |
|---|---|
| STATE: | South Carolina |
| FED PROJ: | Carolina Crossroads Phase 1 & 2 |
| ST PROJ: | P039718 |
| COUNTY: | Lexington & Richland |
| ROUTE: | I-26 & I-126 |

SUBJECT: GENERAL NOTES FOR PROJECT
WALPAR STANDARD DESIGN
FOR: Archer-United Joint Venture

DRAWN BY: IWL DATE: 7/19/23
CHECKED BY: DAL DATE: 8/21/23
DWG NO: C3546-G1

| NO: | REVISIONS | DATE | MADE | CHECKED |
|---|---|---|---|---|
| 0 | CHECK COMPLETE | 8/21/23 | IWL | DAL |

GenNotes

| STRUCTURE | STATION | SPAN | UPRIGHT | CHORD | VERTICAL STRUT | VERTICAL DIAGONAL | HORIZ STRUT/DIAG | CAMBER | POST TILT | BOLTS @ CHORD | ANCHOR BOLTS QTY | ANCHOR BOLTS SIZE | ANCHOR BOLTS EMBED | GUSSET REQ'D | "A" | "B" | "C" | "D" | "F" | "G" | "H" | "K" | "L" | DESIGN SIGN AREA |
|---|---|---|---|---|---|---|---|---|---|---|---|---|---|---|---|---|---|---|---|---|---|---|---|---|
| OH–19 | 18+18.94(EB) | 48'–0 | 30.000 x .500 | 4.500 x .237 | 1.900 x .145 | 1.900 x .145 | 1.900 x .200 | 6 | 5/8 | 12 | 12 | 1 3/4 | 3'–6 | 12 | 20'–0 | 4'–0 | 3'–6 | 1 3/4 | 5/16 | 1/4 | 6 – 3/4 | 3/4 | 1/4 | 399.5 |
| OH–29 | 209+50.04(SB) | 46'–1 | 30.000 x .500 | 4.500 x .237 | 1.660 x .140 | 1.660 x .140 | 1.900 x .200 | 5 3/4 | 7/8 | 12 | 12 | 1 3/4 | 3'–6 | 12 | 26'–4 1/2 | 4'–0 | 3'–6 | 1 3/4 | 5/16 | 1/4 | 4 – 7/8 | 3/4 | 1/4 | 312.5 |
| OH–30 | 38+93.47(SB) | 40'–6 | 30.000 x .375 | 3.500 x .216 | 1.660 x .140 | 1.660 x .140 | 1.900 x .200 | 5 1/16 | 7/8 | 10 | 8 | 2 | 3'–6 | 8 | 25'–1 1/4 | 4'–0 | 3'–6 | 2 | 5/16 | – | --- | – | 1/4 | 315.5 |
| OH–31A | 51+00(EB) | 34'–0 | 24.000 x .375 | 3.500 x .188 | 1.315 x .133 | 1.315 x .133 | 1.660 x .140 | 4 1/4 | 3/4 | 6 | 8 | 1 1/2 | 3'–6 | 8 | 23'–7 1/4 | 3'–6 | 3'–0 | 1 1/2 | 5/16 | – | --- | – | 1/4 | 126.0 |
| OH–31B | 66+00(EB) | 34'–0 | 24.000 x .375 | 3.500 x .188 | 1.315 x .133 | 1.315 x .133 | 1.660 x .140 | 4 1/4 | 13/16 | 6 | 8 | 1 1/2 | 3'–6 | 8 | 24'–10 3/4 | 3'–6 | 3'–0 | 1 1/2 | 5/16 | – | --- | – | 1/4 | 126.0 |

NOTE: ALL PIPE SIZES ARE OUTSIDE DIAMETER

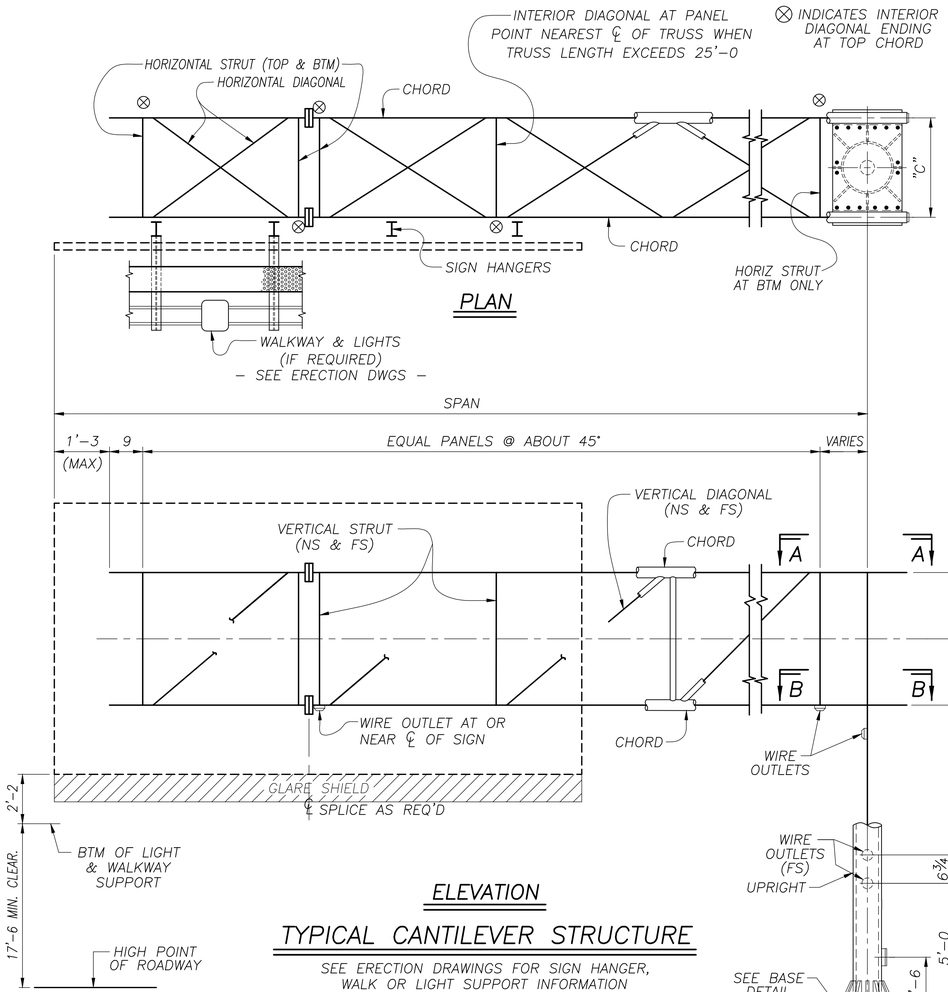


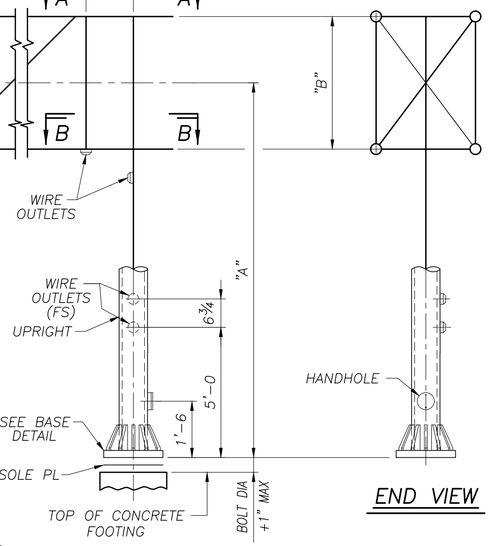


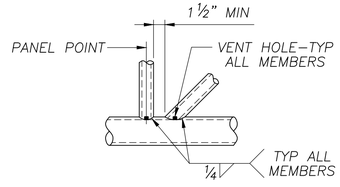


TYP DETAIL AT PANEL POINT

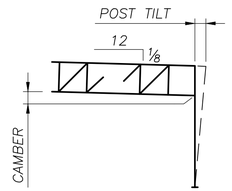


CAMBER DIAGRAM

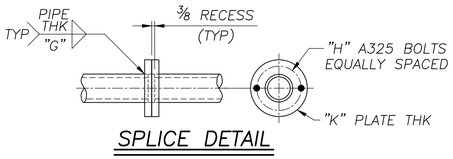


SPLICE DETAIL

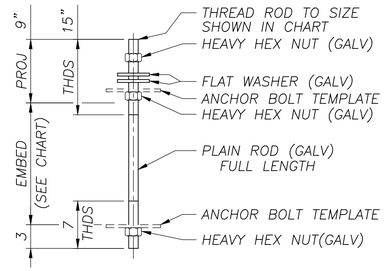


ANCHOR DETAIL

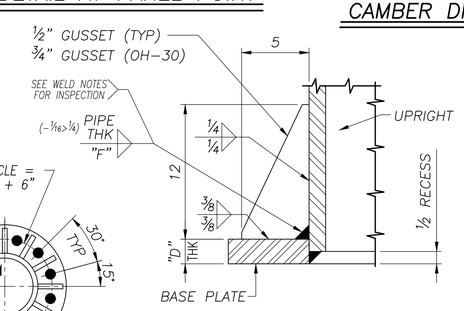


SECTION C–C

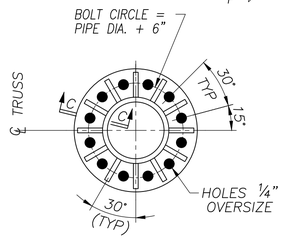


TYP BASE DETAIL
(FOR 12 ANCHOR BOLTS)

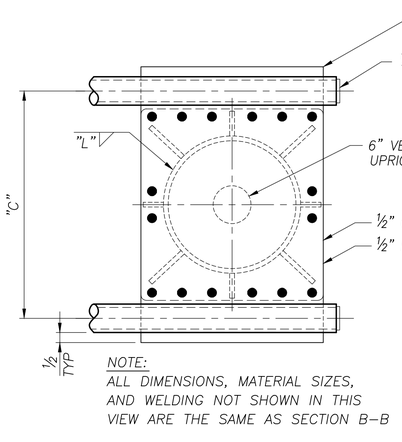


NOTE:
ALL DIMENSIONS, MATERIAL SIZES, AND WELDING NOT SHOWN IN THIS VIEW ARE THE SAME AS SECTION B–B

SECTION A–A
TOP CHORD CONNECTION

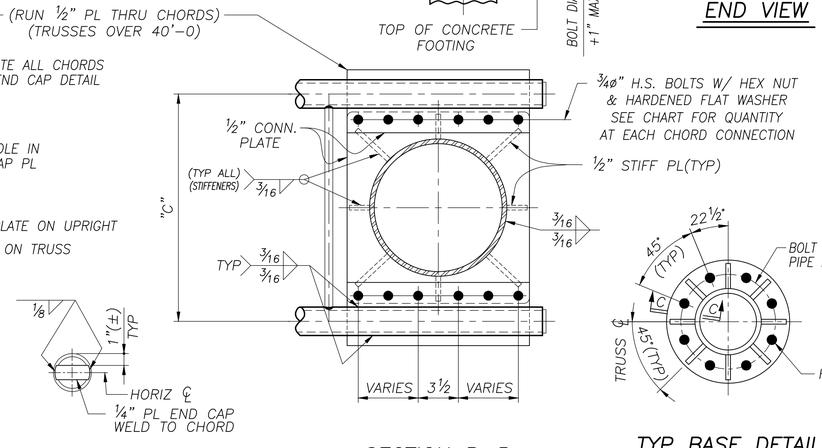


END CAP DETAIL




SECTION B–B
BOTTOM CHORD CONNECTION




TYP BASE DETAIL
(FOR 8 ANCHOR BOLTS)

NOTE:
SEE GENERAL NOTES DRAWING FOR MATERIAL SPECIFICATIONS, FOUNDATION AND STANDARD NOTES

GROUP 2

AASHTO 6th Edition Spec's

SEALED BY:




Oct 25 2023

| NO: | REVISIONS | DATE | MADE | CHECKED |
|---|---|---|---|---|
| 0 | CHECK COMPLETE | 10/25/23 | IWL | RRW |


walpar
A valmont COMPANY
POST OFFICE BOX 28650
BIRMINGHAM ALABAMA 35228
4200 JEFFERSON AVENUE
BIRMINGHAM ALABAMA 35221
PHONE (205)–925–4990
FAX (205) 925–7273


0

| | |
|---|---|
| STATE: | South Carolina |
| FED PROJ: | Carolina Crossroads Phase 1 & 2 |
| ST PROJ: | P039718 |
| COUNTY: | Lexington & Richland |
| ROUTE: | I–26 & I–126 |

| | |
|---|---|
| SUBJECT: | BOX TRUSS CANTILEVER SIGN SUPPORTS |
| | WALPAR STANDARD DESIGN |
| FOR: | Archer–United Joint Venture |
| DRAWN BY: | IWL DATE: 8/24/23 |
| CHECKED BY: | RRW DATE: 10/25/23 |

DWG NO: C3546–D10

BTCT–D

NAME: E:\acad\Djobs\SC\3546\3546–D10.dwg DATE: OCT 25, 2023 TIME: 8:53 AM rw706292

| STRUCTURE | STATION | "A" | | | "D" | BARS "E" | HOOPS "F" (SEE ✱ NOTE) | | | CONC/FTG (cu yds) | REINF/FTG (lbs) | "Z" | "ZZ" |
|---|---|---|---|---|---|---|---|---|---|---|---|---|---|
| OH–19 | 18+18.94(EB) | 4'–6 | | | 28'–0 | 19 – #10 @ 7 3/16in. | 30 – #5 @ 1'–0 | | | 16.49 | 2646 | 4'–8¼ | 6'–9 |

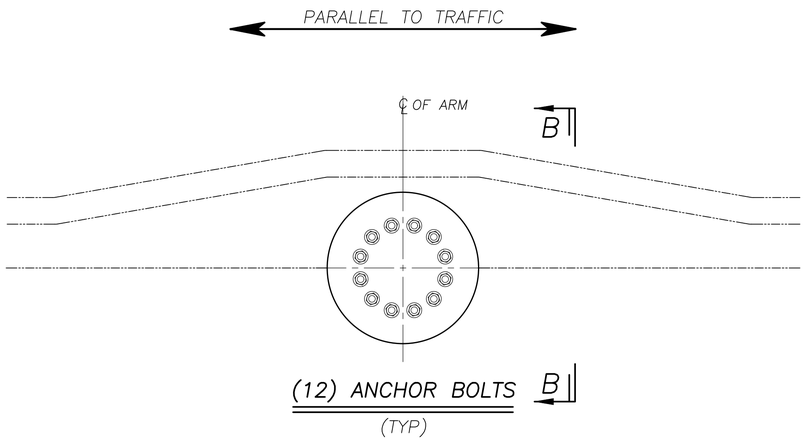


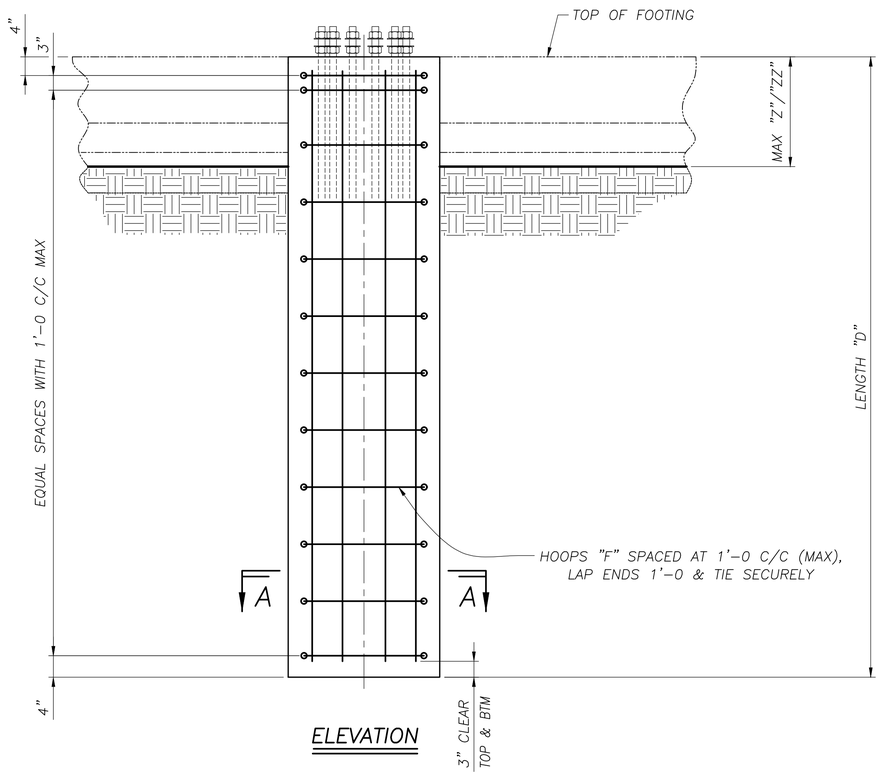


ELEVATION

# SINGLE POLE FOOTING

(CANTILEVER/BUTTERFLY)

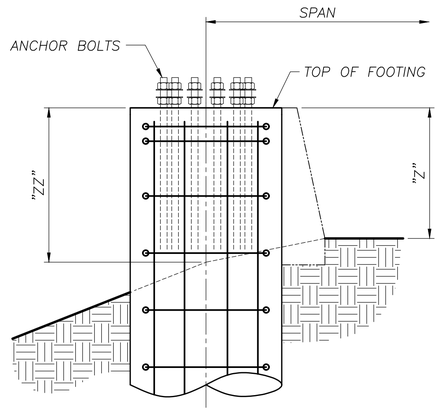


SECTION B–B

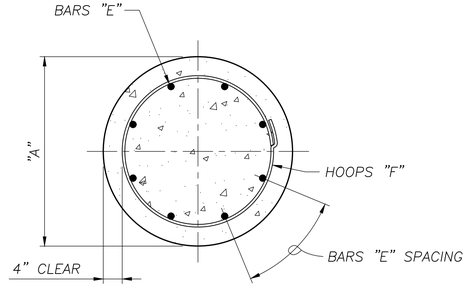


SECTION A–A

**NOTE:**
SEE GENERAL NOTES DRAWING FOR MATERIAL SPECIFICATIONS, FOUNDATION AND STANDARD NOTES

GROUP 2

AASHTO 6th Edition Spec's

SEALED BY:

SOUTH CAROLINA PROFESSIONAL ENGINEER
No. 38665
DAVID A LALLONE

Oct 25 2023

| NO: | REVISIONS | DATE | MADE | CHECKED |
|---|---|---|---|---|
| 0 | CHECK COMPLETE | 9/14/23 | IWL | RRW |

walpar
A valmont COMPANY
POST OFFICE BOX 28650
BIRMINGHAM ALABAMA 35228
4200 JEFFERSON AVENUE
BIRMINGHAM ALABAMA 35221
PHONE (205)–925–4990
FAX (205) 925–7273

0

STATE: South Carolina
FED PROJ: Carolina Crossroads Phase 1 & 2
ST PROJ: P039718
COUNTY: Lexington & Richland
ROUTE: I–26 & I–126

SUBJECT: OVERHEAD SIGN SUPPORT
CANTILEVER/BUTTERFLY CYLINDRICAL FOOTING DESIGN
FOR: Archer–United Joint Venture

DRAWN BY: IWL DATE: 8/24/23
CHECKED BY: RRW DATE: 9/14/23
DWG NO: C3546–D11

CCF–D

| STRUCTURE | STATION | "A" | | | "D" | BARS "E" | HOOPS "F" (SEE ✱ NOTE) | | | CONC/FTG (cu yds) | REINF/FTG (lbs) | "Z" @ ℄ |
|---|---|---|---|---|---|---|---|---|---|---|---|---|
| OH–29 | 209+50.04(SB) | 4'–6 | | | 18'–0 | 19 – #10 @ 7 3/16in. | 20 – #5 @ 1'–0 | | | 10.60 | 1696 | 1'–0 |
| ✱ OH–30 | 38+93.47(SB) | 4'–6 | | | 17'–0 | 19 – #10 @ 7 3/16in. | 19 – #5 @ 1'–0 | | | 10.01 | 1601 | 1'–0 |
| ✱ OH–31A | 51+00(EB) | 4'–0 | | | 14'–0 | 19 – #9 @ 6 1/4in. | 16 – #4 @ 1'–0 | | | 6.52 | 992 | 1'–3 |
| ✱ OH–31B | 66+00(EB) | 4'–0 | | | 15'–0 | 19 – #9 @ 6 1/4in. | 17 – #4 @ 1'–0 | | | 6.98 | 1064 | 1'–3 |

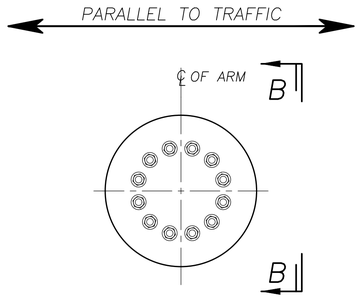


(12) ANCHOR BOLTS

(OH–29 ONLY)

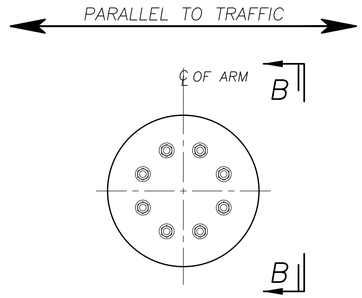


✱(8) ANCHOR BOLTS

(OH–30, OH–31A & OH–31B only)

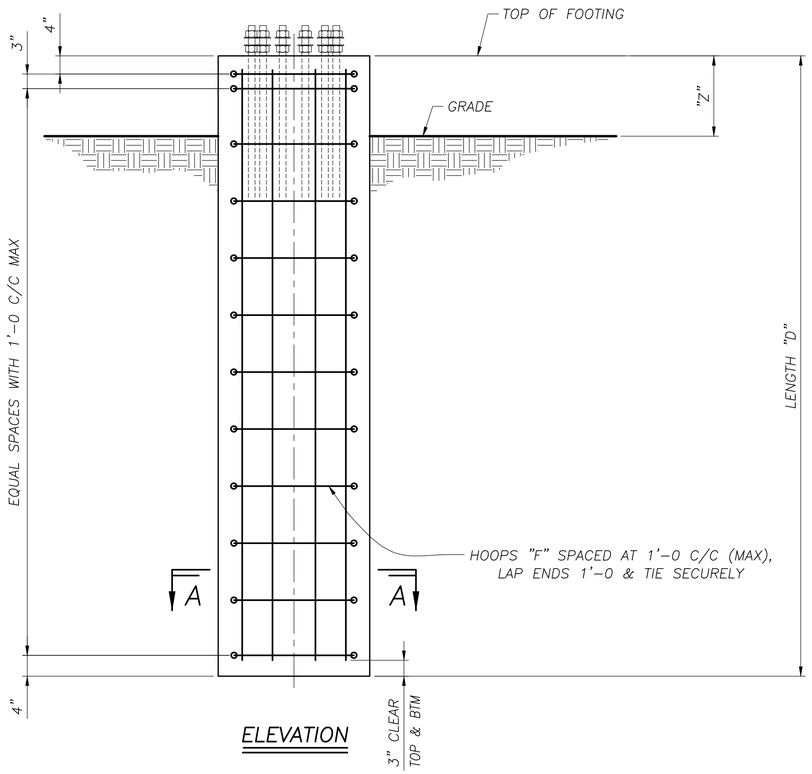


ELEVATION

SINGLE POLE FOOTING

(CANTILEVER/BUTTERFLY)

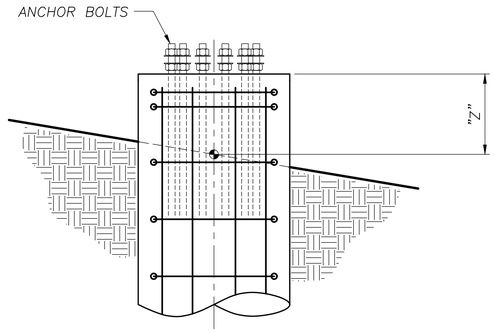


SECTION B–B

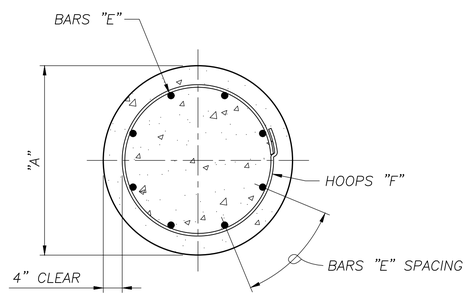


SECTION A–A

NOTE:

SEE GENERAL NOTES DRAWING FOR MATERIAL SPECIFICATIONS, FOUNDATION AND STANDARD NOTES

GROUP 2

AASHTO 6th Edition Spec's

SEALED BY:

SOUTH CAROLINA LICENSED PROFESSIONAL ENGINEER No. 38665 DAVID A LALLONE

Oct 25 2023

walpar
A valmont COMPANY
POST OFFICE BOX 28650
BIRMINGHAM ALABAMA 35228
4200 JEFFERSON AVENUE
BIRMINGHAM ALABAMA 35221
PHONE (205)–925–4990
FAX (205) 925–7273

| NO: | REVISIONS | DATE | MADE | CHECKED |
|---|---|---|---|---|
| 0 | CHECK COMPLETE | 10/24/23 | IWL | RRW |

| | |
|---|---|
| STATE: | South Carolina |
| FED PROJ: | Carolina Crossroads Phase 1 & 2 |
| ST PROJ: | P039718 |
| COUNTY: | Lexington & Richland |
| ROUTE: | I–26 & I–126 |
| SUBJECT: | OVERHEAD SIGN SUPPORT |
| | CANTILEVER/BUTTERFLY CYLINDRICAL FOOTING DESIGN |
| FOR: | Archer–United Joint Venture |
| DRAWN BY: | IWL DATE: 8/24/23 |
| CHECKED BY: | RRW DATE: 10/24/23 |
| DWG NO: | C3546–D12 |

CCF–D

NAME: E:\acad\Djobs\SC\3546\3546–D12.dwg DATE: OCT 24, 2023 TIME: 1:51 PM rw706292

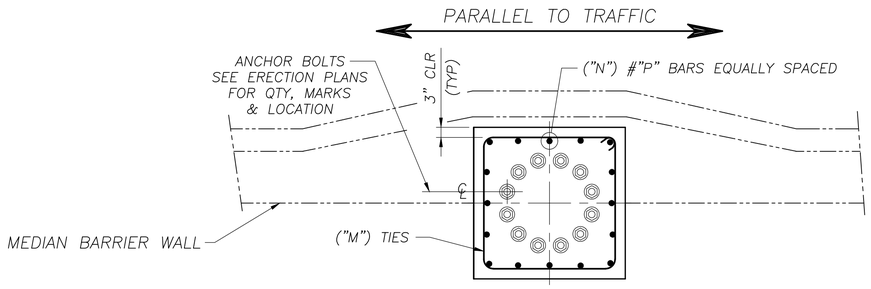


## (12) ANCHOR BOLTS (TYP)

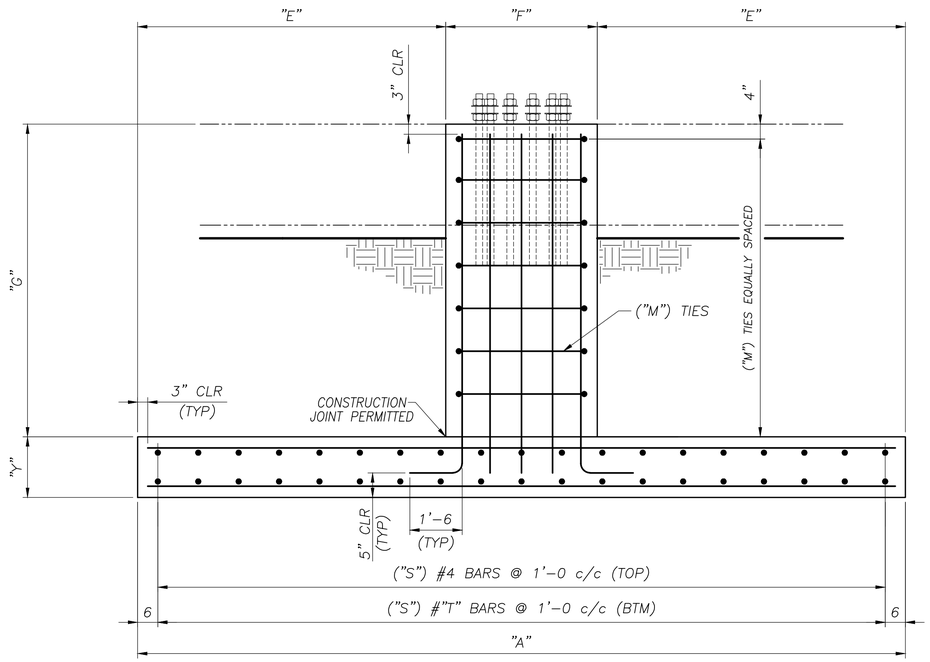


SIDE VIEW

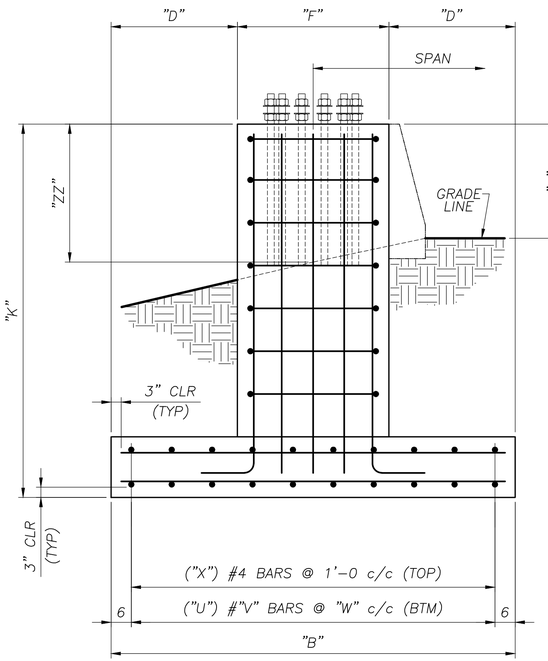


END VIEW

| STRUCTURE | STATION | "A" | "B" | "D" | "E" | "F" | "G" | "K" | "M" | "N" | "P" | "S" | "T" | "U" | "V" | "W" | "X" | "Y" | CONC/FTG (cu yds) | REINF/FTG (lbs) | "Z" | "ZZ" |
|---|---|---|---|---|---|---|---|---|---|---|---|---|---|---|---|---|---|---|---|---|---|---|
| OH–19 | 18+18.94(EB) | 23'–0 | 12'–0 | 3'–9 | 9'–3 | 4'–6 | 10'–0 | 11'–6 | 10–#5 | 40 | 8 | 23 | 4 | 12 | 8 | 1'–0 | 12 | 1'–6 | 22.83 | 2731 | 4'–8¼ | 6'–9 |

1

**NOTE:**
SEE GENERAL NOTES DRAWING FOR MATERIAL SPECIFICATIONS, FOUNDATION AND STANDARD NOTES

GROUP 2

AASHTO 6th Edition Spec's

SEALED BY:

SOUTH CAROLINA PROFESSIONAL ENGINEER
No. 38665
DAVID A LALLONE

Feb 7 2024

walpar
A valmont COMPANY
POST OFFICE BOX 28650
BIRMINGHAM ALABAMA 35228
4200 JEFFERSON AVENUE
BIRMINGHAM ALABAMA 35221
PHONE (205)–925–4990
FAX (205) 925–7273

1

STATE: South Carolina
FED PROJ: Carolina Crossroads Phase 1 & 2
ST PROJ: P039718
COUNTY: Lexington & Richland
ROUTE: I–26 & I–126

SUBJECT: OVERHEAD SIGN SUPPORT
SINGLE POLE SPREAD FOOTING DESIGN
FOR: Archer–United Joint Venture

DRAWN BY: IWL DATE: 8/24/23
CHECKED BY: RRW DATE: 9/14/23
DWG NO: C3546–D13

| NO: | REVISIONS | DATE | MADE | CHECKED |
|---|---|---|---|---|
| 1 | CORRECTED QUANTITIES | 2/6/24 | IWL | DAL |

SP–SF–D

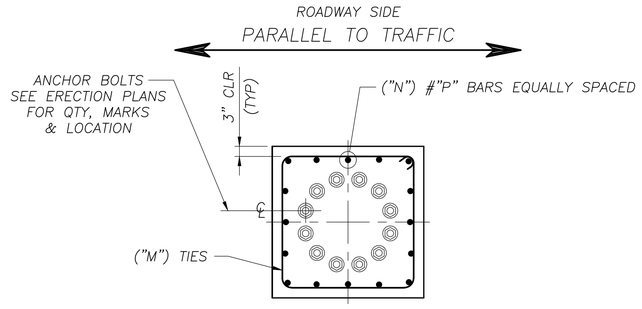


(12) ANCHOR BOLTS

(OH–29 only)

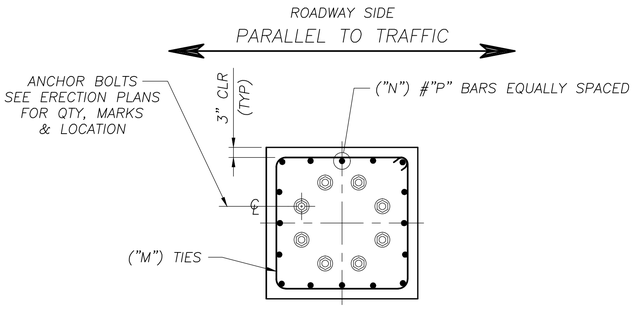


*(8) ANCHOR BOLTS

(OH–30, OH–31A & OH–31B only)

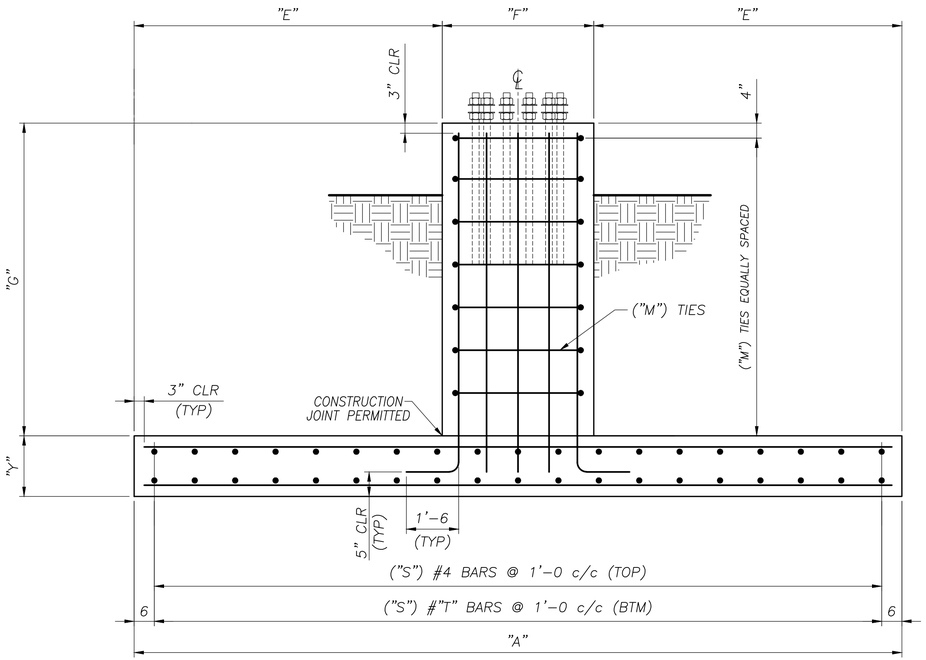


SIDE VIEW

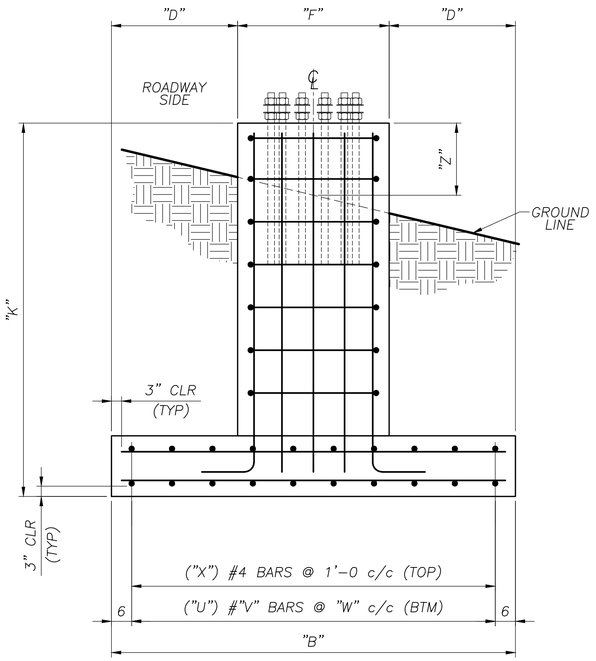


END VIEW

| STRUCTURE | STATION | "A" | "B" | "D" | "E" | "F" | "G" | "K" | "M" | "N" | "P" | "S" | "T" | "U" | "V" | "W" | "X" | "Y" | CONC/FTG (cu yds) | REINF/FTG (lbs) | "Z" |
|---|---|---|---|---|---|---|---|---|---|---|---|---|---|---|---|---|---|---|---|---|---|
| OH–29 | 209+50.04(SB) | 23'–0 | 12'–0 | 3'–9 | 9'–3 | 4'–6 | 4'–0 | 6'–0 | 4–#5 | 40 | 8 | 23 | 4 | 12 | 6 | 1'–0 | 12 | 2'–0 | 23.44 | 1722 | 1'–0 |
| * OH–30 | 38+93.47(SB) | 21'–0 | 11'–0 | 3'–3 | 8'–3 | 4'–6 | 4'–0 | 5'–6 | 4–#5 | 40 | 8 | 21 | 4 | 11 | 8 | 1'–0 | 11 | 1'–6 | 15.83 | 1777 | 1'–0 |
| * OH–31A | 51+00(EB) | 17'–0 | 9'–0 | 2'–6 | 6'–6 | 4'–0 | 4'–0 | 5'–6 | 4–#4 | 32 | 8 | 17 | 4 | 9 | 5 | 1'–0 | 9 | 1'–6 | 10.87 | 1014 | 1'–3 |
| * OH–31B | 66+00(EB) | 17'–0 | 9'–0 | 2'–6 | 6'–6 | 4'–0 | 4'–0 | 5'–6 | 4–#4 | 32 | 8 | 17 | 4 | 9 | 5 | 1'–0 | 9 | 1'–6 | 10.87 | 1014 | 1'–3 |

NOTE:
SEE GENERAL NOTES DRAWING FOR MATERIAL SPECIFICATIONS, FOUNDATION AND STANDARD NOTES

GROUP 2

AASHTO 6th Edition Spec's

SEALED BY:

SOUTH CAROLINA PROFESSIONAL ENGINEER
No. 38665
DAVID A LALLONE

Oct 25 2023

walpar
A valmont COMPANY
POST OFFICE BOX 28650
BIRMINGHAM ALABAMA 35228
4200 JEFFERSON AVENUE
BIRMINGHAM ALABAMA 35221
PHONE (205)–925–4990
FAX (205) 925–7273

| NO: | REVISIONS | DATE | MADE | CHECKED |
|---|---|---|---|---|
| 0 | CHECK COMPLETE | 9/14/23 | IWL | RRW |

STATE: South Carolina
FED PROJ: Carolina Crossroads Phase 1 & 2
ST PROJ: P039718
COUNTY: Lexington & Richland
ROUTE: I–26 & I–126

SUBJECT: OVERHEAD SIGN SUPPORT
SINGLE POLE SPREAD FOOTING DESIGN
FOR: Archer–United Joint Venture

DRAWN BY: IWL DATE: 8/24/23
CHECKED BY: RRW DATE: 9/14/23

DWG NO: C3546–D14

SP–SF–D

C3546-D15

| STRUCTURE | STATION | SPAN | CHORDS | VERTICAL DIAGONAL | HORIZ DIAGONAL | STRUTS | CAMBER | ANCHOR BOLTS SIZE LT | ANCHOR BOLTS EMBED | ANCHOR BOLTS SIZE RT | ANCHOR BOLTS EMBED | LEFT UPRIGHT | RIGHT UPRIGHT | LEFT UPRIGHT DIAG & STRUT | RIGHT UPRIGHT DIAG & STRUT | SEAT | "A" | "B" | "C" | "D" | "E" | "F" | "G" | "H" LEFT | "H" RIGHT | CHORD SPLICE INFORMATION "J" | "K" | "L" | "M" LEFT | "M" RIGHT | "N" LEFT | "N" RIGHT | No OF SECTIONS | DESIGN SIGN AREA (ft²) |
|---|---|---|---|---|---|---|---|---|---|---|---|---|---|---|---|---|---|---|---|---|---|---|---|---|---|---|---|---|---|---|---|---|---|---|
| OH-12 | 414+73.64(EB) | 89'-0 | 6.625 x .250 | 1.900 x .200 | 1.900 x .200 | 1.660 x .140 | 3 | 1 1/2 | 3'-6 | 1 3/4 | 3'-6 | 12.750 x .250 | 14.000 x .250 | 3.500 x .188 | 3.500 x .188 | LT-WT7x15 RT-WT6x13 | 23'-4 1/2 | 33'-0 3/4 | 5'-6 | 1'-1 1/2 | 3'-9 | 3'-3 | 5/8 | 1'-1 1/2 | 1'-2 | 1/4 | 1 | 6-1ø | 1 1/2 | 1 3/4 | 5/16 | 5/16 | 3 | 908.0 |
| OH-22 | 3027+15.32(WB) | 70'-0 | 4.500 x .188 | 1.660 x .140 | 1.660 x .140 | 1.315 x .133 | 2 | 1 1/4 | 3'-6 | 1 1/4 | 3'-6 | 8.625 x .188 | 8.625 x .188 | 2.375 x .154 | 2.375 x .154 | WT6x13 | 27'-4 1/2 | 25'-8 1/2 | 4'-9 | 9 | 3'-9 | 3'-3 | 1/2 | 10 1/2 | 10 1/2 | 1/4 | 3/4 | 4-3/4ø | 1 1/4 | 1 1/4 | 5/16 | 5/16 | 2 | 313.0 |

NOTE: ALL PIPE SIZES ARE OUTSIDE DIAMETER

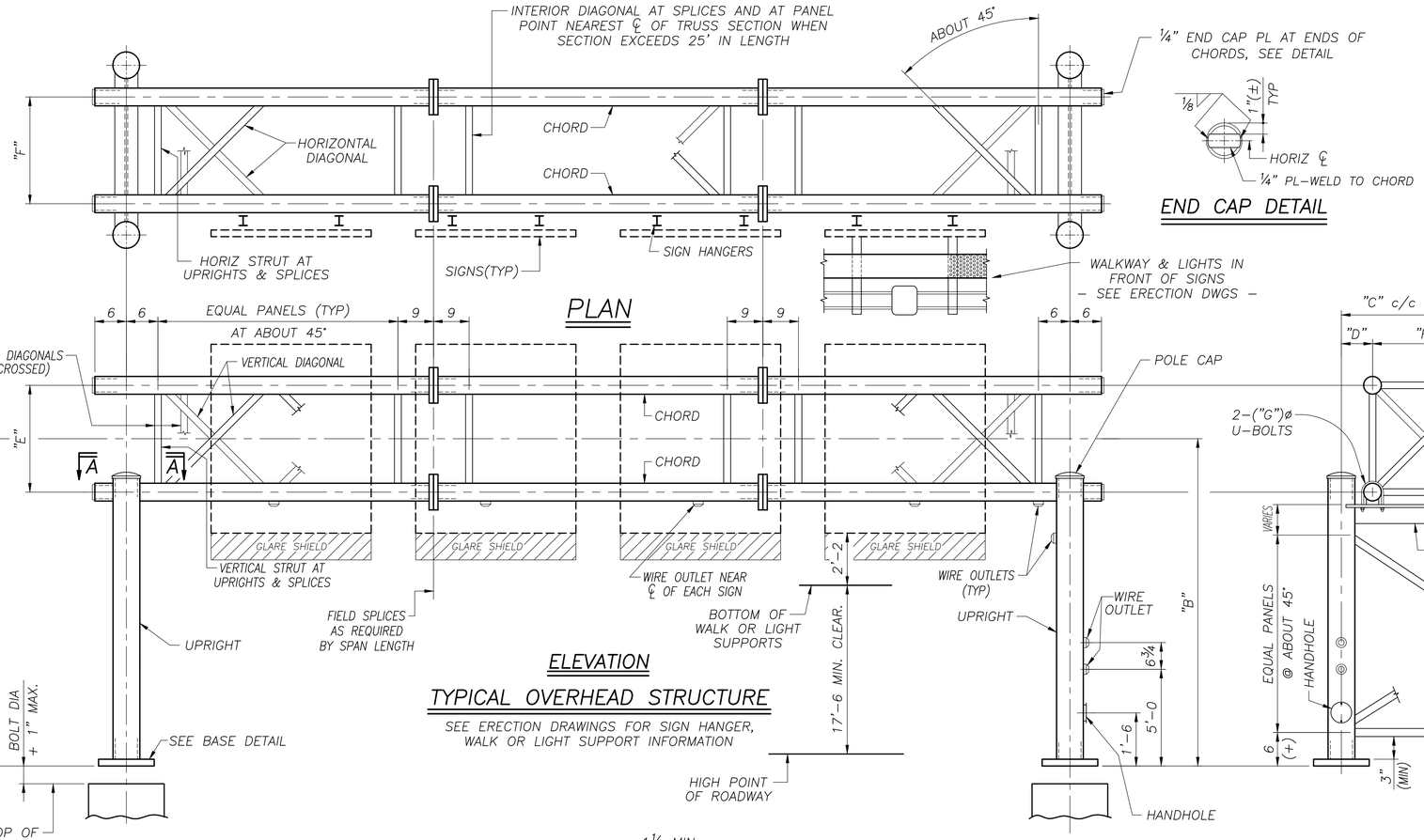





END CAP DETAIL

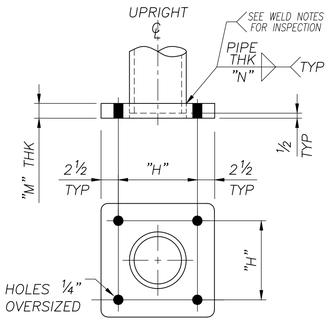


TYP BASE DETAIL

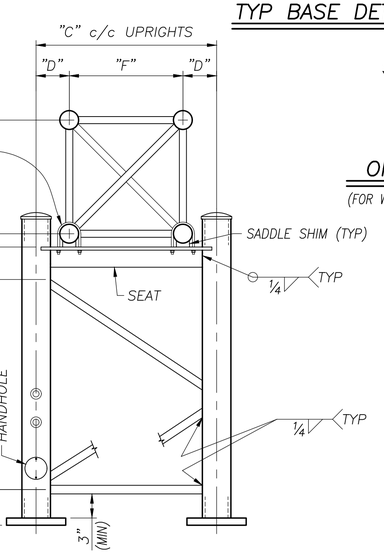


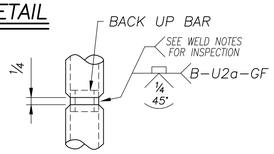


OPTIONAL SPLICE

(FOR WALL THK 5/16 OR GREATER ONLY)

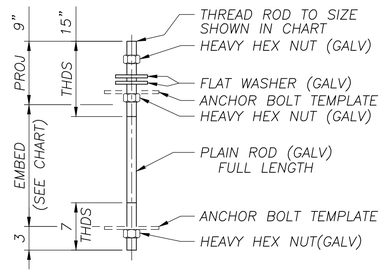


ANCHOR DETAIL

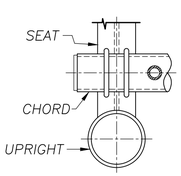


SECTION A-A

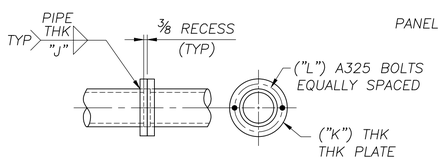


TYP SPLICE DETAIL

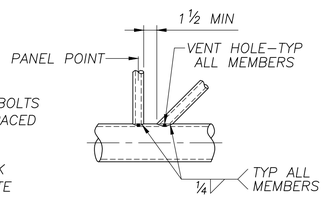


TYP DETAIL AT PANEL POINT

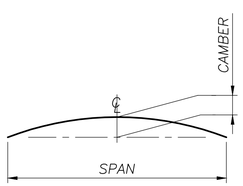


CAMBER DIAGRAM

**NOTE:**
SEE GENERAL NOTES DRAWING FOR MATERIAL SPECIFICATIONS, FOUNDATION AND STANDARD NOTES

GROUP 2

AASHTO 6th Edition Spec's

SEALED BY:




Oct 25 2023

walpar
A valmont COMPANY

POST OFFICE BOX 28650
BIRMINGHAM ALABAMA 35228
4200 JEFFERSON AVENUE
BIRMINGHAM ALABAMA 35221
PHONE (205)-925-4990
FAX (205) 925-7273

0

| | |
|---|---|
| STATE: | South Carolina |
| FED PROJ: | Carolina Crossroads Phase 1 & 2 |
| ST PROJ: | P039718 |
| COUNTY: | Lexington & Richland |
| ROUTE: | I-26 & I-126 |
| SUBJECT: | OVERHEAD SIGN SUPPORT DESIGN |
| | WALPAR STD BOX TRUSS DESIGN |
| FOR: | Archer-United Joint Venture |
| DRAWN BY: | IWL DATE: 8/24/23 |
| CHECKED BY: | RRW DATE: 9/14/23 |
| DWG NO: | C3546-D15 |

| NO: | REVISIONS | DATE | MADE | CHECKED |
|---|---|---|---|---|
| 0 | CHECK COMPLETE | 9/14/23 | IWL | RRW |

BTDPD-D

C3546-D16

| STRUCTURE | STATION | SPAN | CHORDS | VERTICAL DIAGONAL | HORIZ DIAGONAL | STRUTS | CAMBER | ANCHOR BOLTS SIZE LT | ANCHOR BOLTS EMBED | ANCHOR BOLTS SIZE RT | ANCHOR BOLTS EMBED | LEFT UPRIGHT | RIGHT UPRIGHT | LEFT UPRIGHT DIAG & STRUT | RIGHT UPRIGHT DIAG & STRUT | SEAT | "A" | "B" | "C" | "D" | "E" | "F" | "G" | "H" LEFT | "H" RIGHT | CHORD SPLICE INFORMATION "J" | "K" | "L" | "M" LEFT | "M" RIGHT | "N" LEFT | "N" RIGHT | No OF SECTIONS | DESIGN SIGN AREA (ft²) |
|---|---|---|---|---|---|---|---|---|---|---|---|---|---|---|---|---|---|---|---|---|---|---|---|---|---|---|---|---|---|---|---|---|---|---|
| OH-20 | 5418+54.43(EB) | 60'-6 | 4.500 x .188 | 1.660 x .140 | 1.660 x .140 | 1.315 x .133 | 1 9/16 | 1 3/4 | 3'-6 | 1 3/4 | 3'-6 | 18.000 x .250 | 20.000 x .250 | 4.500 x .188 | 5.563 x .188 | W8x24 | 75'-1 1/2 | 78'-7 1/4 | 5'-9 | 1'-3 | 3'-9 | 3'-3 | 1/2 | 1'-6 | 1'-8 | 1/4 | 3/4 | 4-3/4ø | 2 | 2 | 5/16 | 5/16 | 2 | 306.0 |

NOTE: ALL PIPE SIZES ARE OUTSIDE DIAMETER

| UPRIGHT SPLICE INFORMATION | | | | | |
|---|---|---|---|---|---|
| SIDE | LENGTH | "U" | "V" | "W" | "X" |
| TL | 36'-6 1/4 | 1 1/4 | 16 | 1 | 1'-9 |
| TR | 41'-1 1/4 | 1 1/4 | 16 | 1 | 1'-11 |

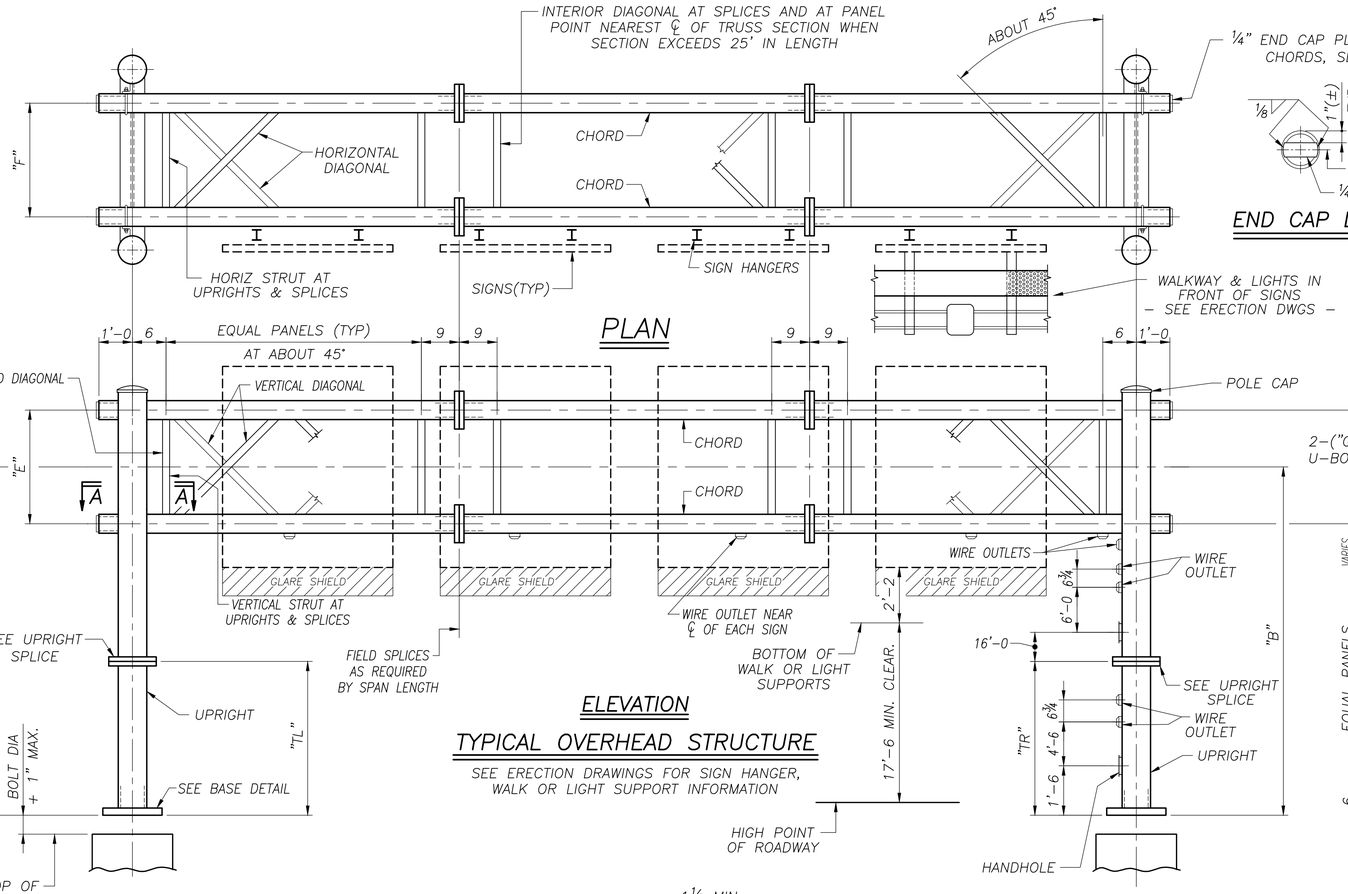


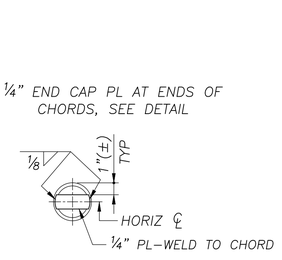


END CAP DETAIL

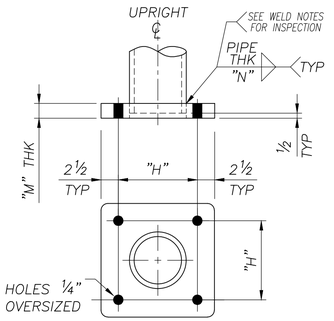


TYP BASE DETAIL

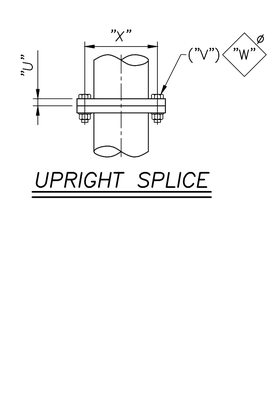


UPRIGHT SPLICE

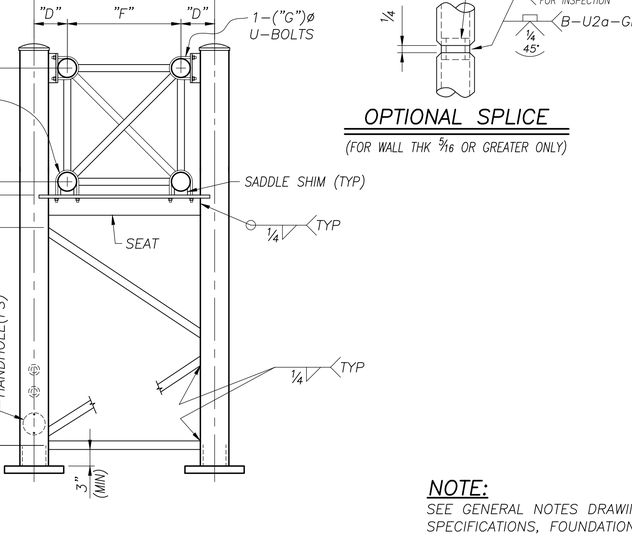





OPTIONAL SPLICE

(FOR WALL THK 5/16 OR GREATER ONLY)

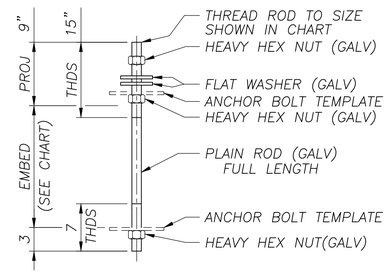


ANCHOR DETAIL

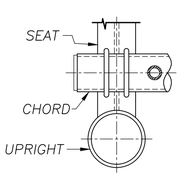


SECTION A-A

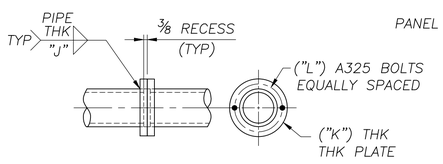


TYP SPLICE DETAIL

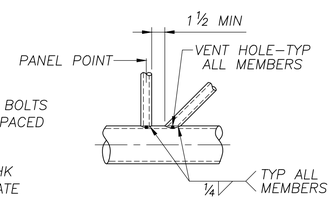


TYP DETAIL AT PANEL POINT

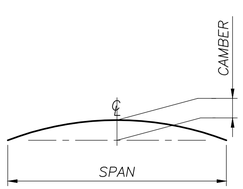


CAMBER DIAGRAM

NOTE:
SEE GENERAL NOTES DRAWING FOR MATERIAL SPECIFICATIONS, FOUNDATION AND STANDARD NOTES

GROUP 2

AASHTO 6th Edition Spec's

SEALED BY:

SOUTH CAROLINA PROFESSIONAL ENGINEER No. 38665 DAVID A LALLONE

Oct 25 2023


walpar
A valmont COMPANY
POST OFFICE BOX 28650
BIRMINGHAM ALABAMA 35228
4200 JEFFERSON AVENUE
BIRMINGHAM ALABAMA 35221
PHONE (205)-925-4990
FAX (205) 925-7273


| | |
|---|---|
| STATE: | South Carolina |
| FED PROJ: | Carolina Crossroads Phase 1 & 2 |
| ST PROJ: | P039718 |
| COUNTY: | Lexington & Richland |
| ROUTE: | I-26 & I-126 |
| SUBJECT: | OVERHEAD SIGN SUPPORT DESIGN |
| | WALPAR STD BOX TRUSS DESIGN |
| FOR: | Archer-United Joint Venture |
| DRAWN BY: | IWL DATE: 8/24/23 |
| CHECKED BY: | RRW DATE: 9/14/23 |
| DWG NO: | C3546-D16 |

| NO: | REVISIONS | DATE | MADE | CHECKED |
|---|---|---|---|---|
| 0 | CHECK COMPLETE | 9/14/23 | IWL | RRW |

BTDPD-D

| STRUCTURE | STATION | LENGTH "A" | "B" | SPAN "C" | CYL DIA "D" | BARS "E" (±)c/c (per cyl) | HOOPS "F" (±)c/c (per cyl) | TOTAL FOR FOUNDATION REBAR WT | TOTAL FOR FOUNDATION CONCRETE (cu yds) | "Z" | "ZZ" |
|---|---|---|---|---|---|---|---|---|---|---|---|
| OH–12(L) | 414+73.64(EB) | 25'–0 | 5'–6 | 89'–0 | 3'–6 | 14 – #10 @ 7⅛ | 26 – #4 @ 1'–0 | 3287 | 17.82 | 5'–8¼ | 6'–0 |

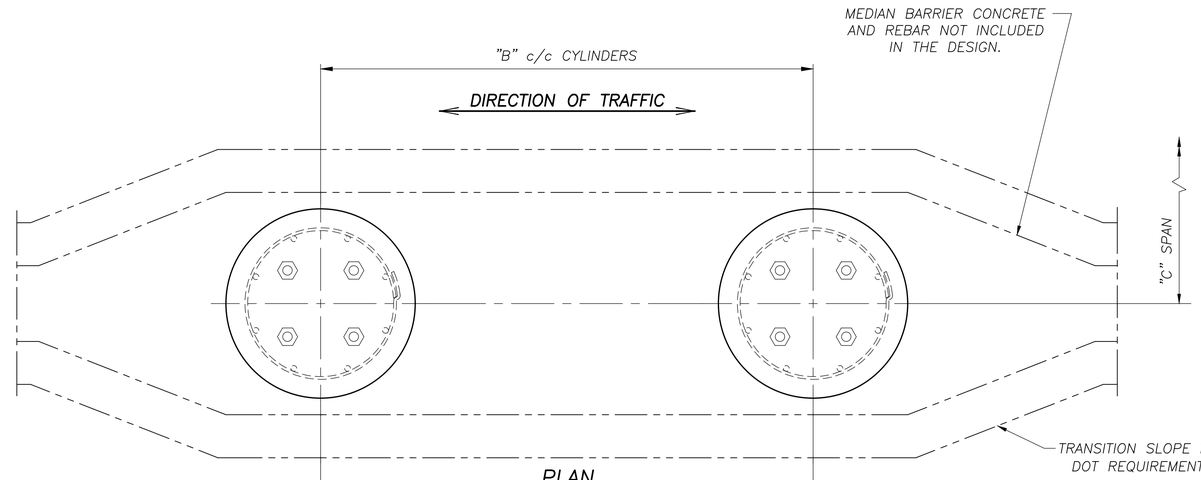


PLAN

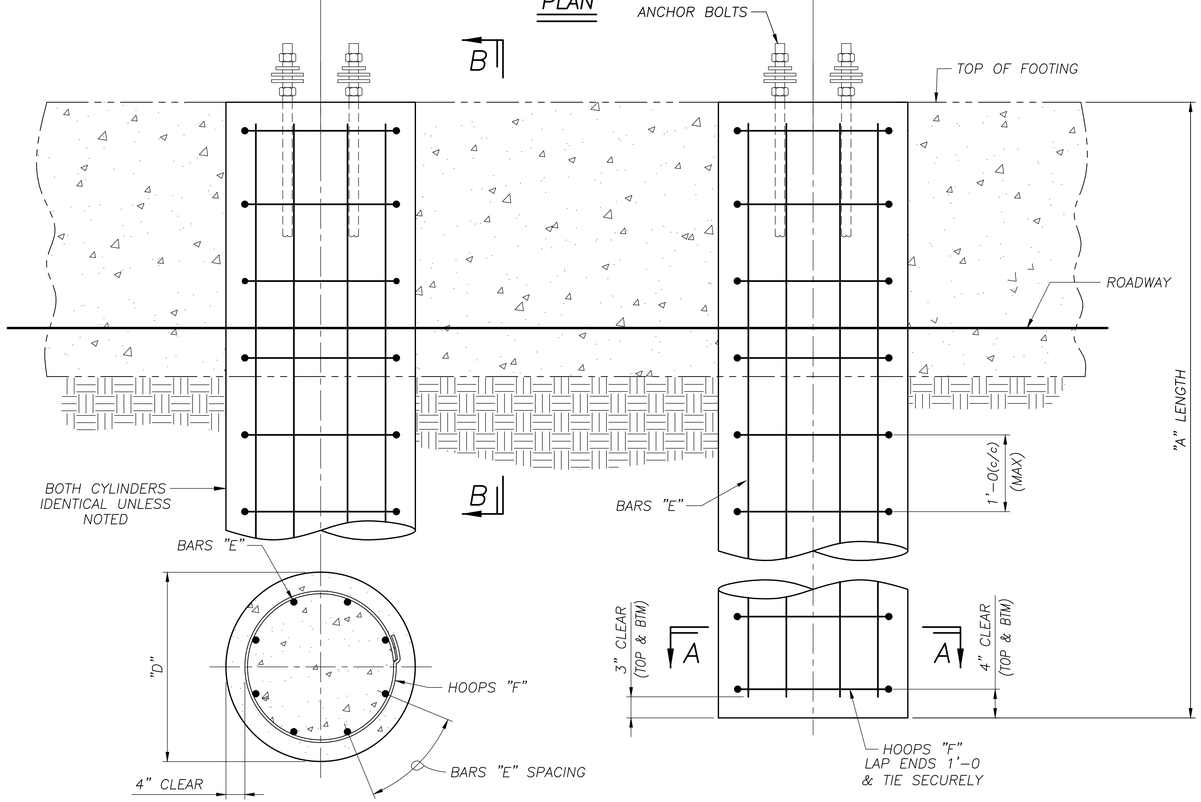





SECTION A–A

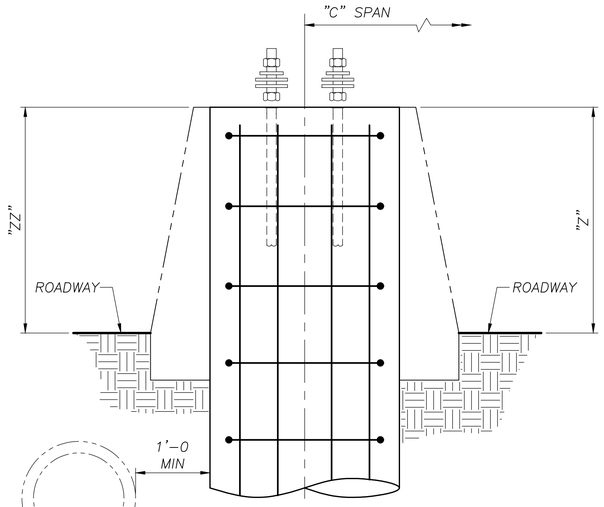


SECTION B–B

ANY ENCOUNTERS WITH RCP DRAINAGE PIPES DURING THE INSTALLATION OF A FOUNDATION SHOULD BE ROUTED AROUND AFTER THE FOUNDATION IS COMPLETED WITH 1'–0 CLEAR

ELEVATION

DOUBLE POLE OVERHEAD FOOTING

**NOTE:**
SEE GENERAL NOTES DRAWING FOR MATERIAL SPECIFICATIONS, FOUNDATION AND STANDARD NOTES

GROUP 2

AASHTO 6th Edition Spec's

SEALED BY:

SOUTH CAROLINA PROFESSIONAL ENGINEER
No. 38665
DAVID A LALLONE

Oct 25 2023

walpar
A valmont COMPANY
POST OFFICE BOX 28650
BIRMINGHAM ALABAMA 35228
4200 JEFFERSON AVENUE
BIRMINGHAM ALABAMA 35221
PHONE (205)–925–4990
FAX (205) 925–7273

| | |
|---|---|
| STATE: | South Carolina |
| FED PROJ: | Carolina Crossroads Phase 1 & 2 |
| ST PROJ: | P039718 |
| COUNTY: | Lexington & Richland |
| ROUTE: | I–26 & I–126 |
| SUBJECT: | OVERHEAD SIGN SUPPORT CYLINDRICAL FOOTING DRAWING |
| FOR: | Archer–United Joint Venture |
| DRAWN BY: | IWL DATE: 8/24/23 |
| CHECKED BY: | RRW DATE: 9/14/23 |
| DWG NO: | C3546–D17 |

| NO: | REVISIONS | DATE | MADE | CHECKED |
|---|---|---|---|---|
| 0 | CHECK COMPLETE | 9/14/23 | IWL | RRW |

DP–CF–D

NAME: E:\acad\Djobs\SC\3546\3546–D17.dwg DATE: SEP 14, 2023 TIME: 10:41 AM rw706292

| STRUCTURE | STATION | LENGTH "A" | "B" | SPAN "C" | CYL DIA "D" | BARS "E" (±)c/c (per cyl) | HOOPS "F" (±)c/c (per cyl) | TOTAL FOR FOUNDATION REBAR WT | TOTAL FOR FOUNDATION CONCRETE (cu yds) | "Z" |
|---|---|---|---|---|---|---|---|---|---|---|
| OH–12(R) | 414+73.64(EB) | 23'–0 | 5'–6 | 89'–0 | 3'–6 | 14 – #9 @ 7⅛ | 24 – #4 @ 1'–0 | 2451 | 16.39 | 1'–0 |
| OH–20(L) | 5418+54.43(EB) | 19'–0 | 5'–9 | 60'–6 | 4'–0 | 19 – #9 @ 6¼ | 20 – #4 @ 1'–0 | 2690 | 17.69 | 9" |
| OH–20(R) | 5418+54.43(EB) | 19'–0 | 5'–9 | 60'–6 | 4'–0 | 19 – #9 @ 6¼ | 20 – #4 @ 1'–0 | 2690 | 17.69 | 9" |
| OH–22(L) | 3027+15.32(WB) | 17'–0 | 4'–9 | 70'–0 | 2'–6 | 9 – #8 @ 7 1⁄16 | 18 – #4 @ 1'–0 | 962 | 6.18 | 1'–3 |
| OH–22(R) | 3027+15.32(WB) | 15'–0 | 4'–9 | 70'–0 | 2'–6 | 9 – #8 @ 7 1⁄16 | 16 – #4 @ 1'–0 | 847 | 5.45 | 1'–3 |

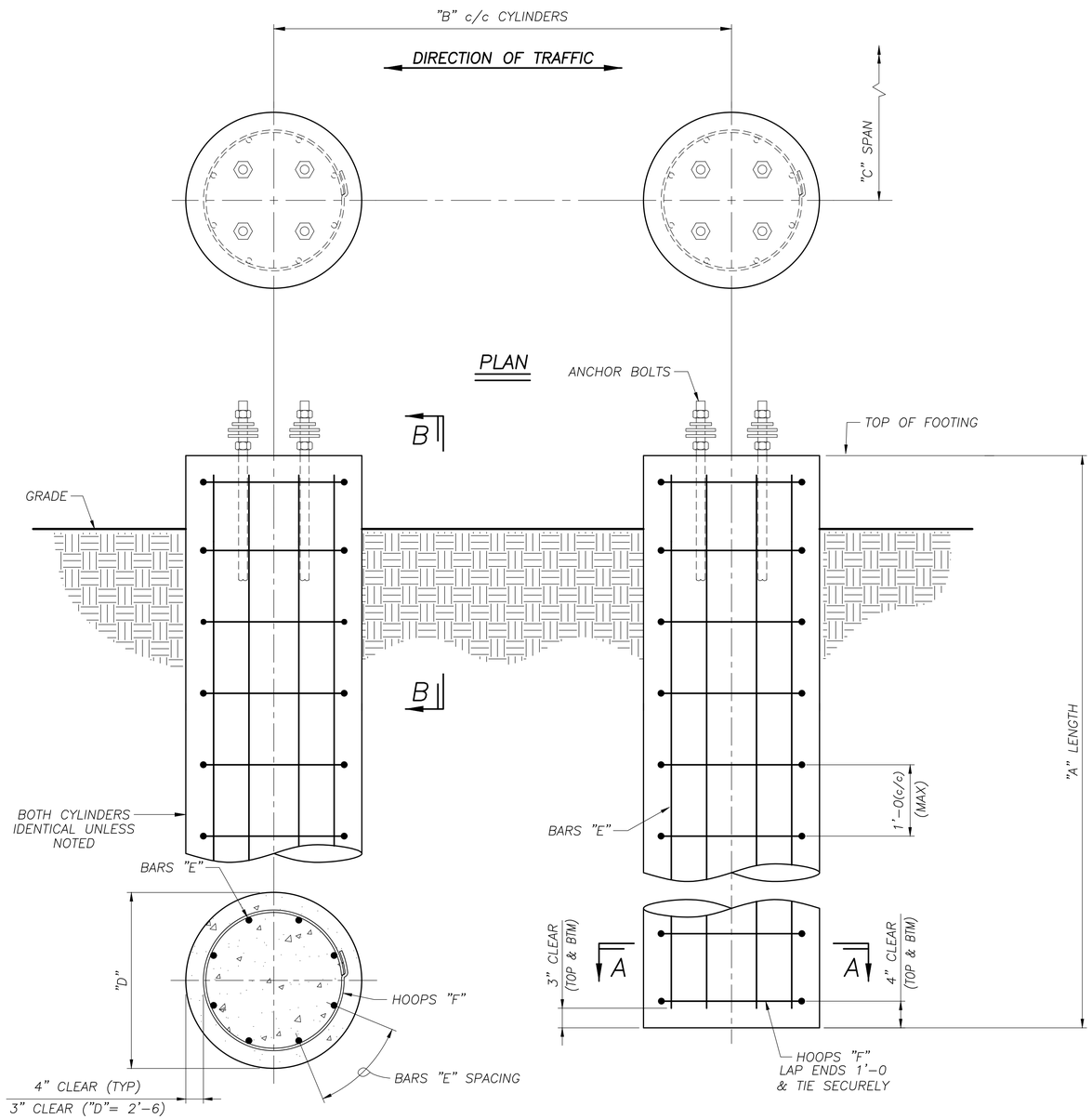


SECTION A–A

ELEVATION

DOUBLE POLE OVERHEAD FOOTING

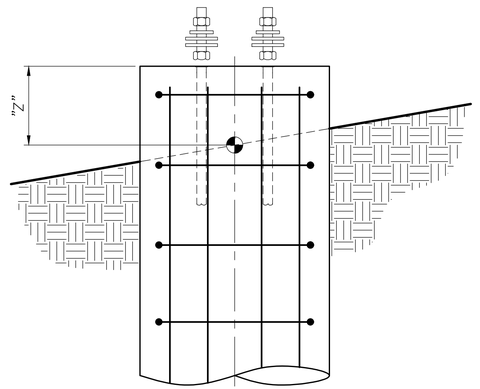


SECTION B–B

NOTE:
SEE GENERAL NOTES DRAWING FOR MATERIAL SPECIFICATIONS, FOUNDATION AND STANDARD NOTES

GROUP 2

AASHTO 6th Edition Spec's

SEALED BY:

SOUTH CAROLINA PROFESSIONAL ENGINEER
No. 38665
DAVID A LALLONE

Oct 25 2023

walpar
A valmont COMPANY
POST OFFICE BOX 28650
BIRMINGHAM ALABAMA 35228
4200 JEFFERSON AVENUE
BIRMINGHAM ALABAMA 35221
PHONE (205)–925–4990
FAX (205) 925–7273

| NO: | REVISIONS | DATE | MADE | CHECKED |
|---|---|---|---|---|
| 0 | CHECK COMPLETE | 9/14/23 | IWL | RRW |

STATE: South Carolina
FED PROJ: Carolina Crossroads Phase 1 & 2
ST PROJ: P039718
COUNTY: Lexington & Richland
ROUTE: I–26 & I–126

SUBJECT: OVERHEAD SIGN SUPPORT
CYLINDRICAL FOOTING DRAWING
FOR: Archer–United Joint Venture

DRAWN BY: IWL DATE: 8/24/23
CHECKED BY: RRW DATE: 9/14/23

DWG NO: C3546–D18

DP–CF–D

NAME: E:\acad\Djobs\SC\3546\3546-D18.dwg DATE: SEP 14, 2023 TIME: 10:41 AM rw706292

| STRUCTURE | STATION | CONC/FTG (yds³) | REINF/FTG (lbs) | "A" | "B" | "C" | "D" | "E" | "F" | "G" | "H" | "J" | "K" | "L" | "M" | "N" | "P" | "R" | "S" | "T" | "U" | "V" | "W" | "X" | "Z" | "ZZ" |
|---|---|---|---|---|---|---|---|---|---|---|---|---|---|---|---|---|---|---|---|---|---|---|---|---|---|---|
| OH–12(L) | 414+73.64(EB) | 18.29 | 2285 | 22'–0 | 11'–0 | 5'–6 | 7'–9 | 1'–1½ | 7'–1½ | 2'–3 | 4'–4½ | 7'–6 | 1'–6 | 9'–0 | 32 | 12 | 8 | 4 | 8 | 22 | 5 | 11 | 9 | 1'–0 | 5'–8¼ | 6'–0 |

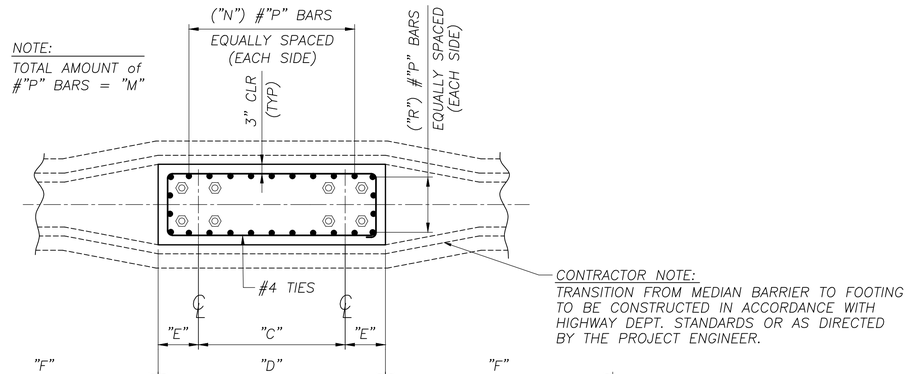


NOTE:
TOTAL AMOUNT of #"P" BARS = "M"

CONTRACTOR NOTE:
TRANSITION FROM MEDIAN BARRIER TO FOOTING TO BE CONSTRUCTED IN ACCORDANCE WITH HIGHWAY DEPT. STANDARDS OR AS DIRECTED BY THE PROJECT ENGINEER.

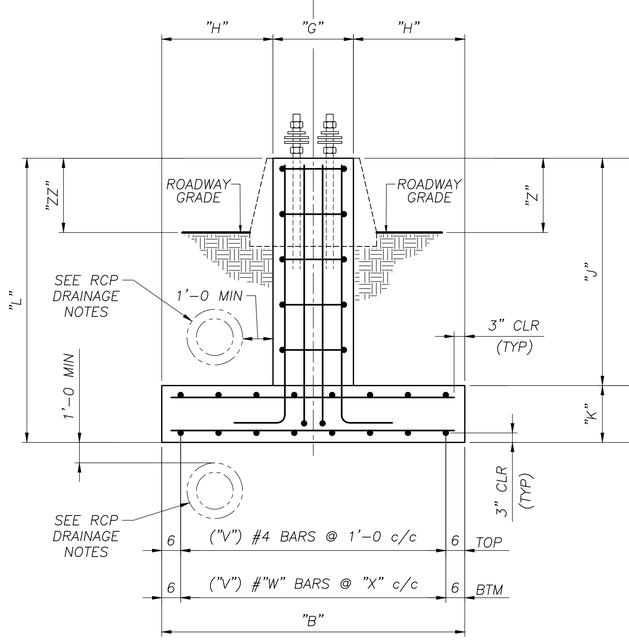


END VIEW
(LOOKING IN DIRECTION OF TRAFFIC)

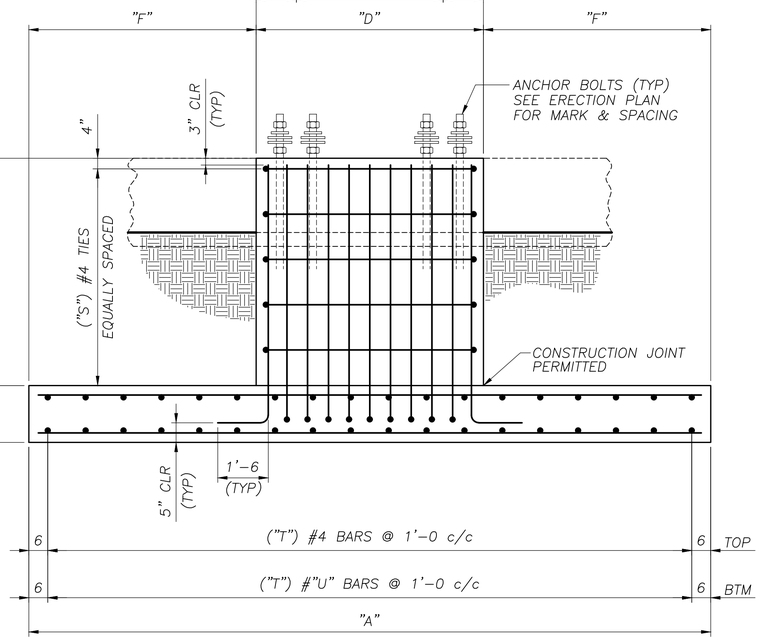


SIDE VIEW
(PARALLEL TO ROADWAY)

## RCP DRAINAGE NOTE:

ANY ENCOUNTERS WITH RCP DRAINAGE PIPES DURING THE INSTALLATION OF A FOUNDATION SHOULD BE ROUTED AROUND THE PEDESTAL AS SHOWN IN END VIEW IF LOCATED ABOVE PAD OF FOOTING. IF THE RCP PIPE IS LOCATED BELOW PAD OF THE FOUNDATION, RCP PIPE MUST HAVE A MINIMUM OF 1'–0 PACKED COVER.

## NOTE:

SEE GENERAL NOTES DRAWING FOR MATERIAL SPECIFICATIONS, FOUNDATION AND STANDARD NOTES

GROUP 2

AASHTO 6th Edition Spec's

SEALED BY:

SOUTH CAROLINA PROFESSIONAL ENGINEER
David A LaLone
No. 38665
DAVID A LALONE

Oct 25 2023

| NO: | REVISIONS | DATE | MADE | CHECKED |
|---|---|---|---|---|
| 0 | CHECK COMPLETE | 9/14/23 | IWL | RRW |

walpar
A valmont COMPANY
POST OFFICE BOX 28650
BIRMINGHAM ALABAMA 35228
4200 JEFFERSON AVENUE
BIRMINGHAM ALABAMA 35221
PHONE (205)–925–4990
FAX (205) 925–7273

| | |
|---|---|
| STATE: | South Carolina |
| FED PROJ: | Carolina Crossroads Phase 1 & 2 |
| ST PROJ: | P039718 |
| COUNTY: | Lexington & Richland |
| ROUTE: | I–26 & I–126 |
| SUBJECT: | OVERHEAD SIGN SUPPORT |
| | MEDIAN SPREAD FOOTING DRAWING |
| FOR: | Archer–United Joint Venture |
| DRAWN BY: | IWL DATE: 8/24/23 |
| CHECKED BY: | RRW DATE: 9/14/23 |
| DWG NO: | C3546–D19 |

0

DP–SF–D

| STRUCTURE | STATION | CONC/FTG (yds³) | REINF/FTG (lbs) | "A" | "B" | "C" | "D" | "E" | "F" | "G" | "H" | "J" | "K" | "L" | "M" | "N" | "P" | "R" | "S" | "T" | "U" | "V" | "W" | "X" | "Z" |
|---|---|---|---|---|---|---|---|---|---|---|---|---|---|---|---|---|---|---|---|---|---|---|---|---|---|
| OH–12(R) | 414+73.64(EB) | 15.80 | 1773 | 21'–0 | 11'–0 | 5'–6 | 8'–0 | 1'–3 | 6'–6 | 2'–6 | 4'–3 | 4'–0 | 1'–6 | 5'–6 | 40 | 15 | 8 | 5 | 5 | 21 | 4 | 11 | 8 | 1'–0 | 1'–0 |
| OH–20(L) | 5418+54.43(EB) | 18.80 | 2150 | 23'–0 | 12'–0 | 5'–9 | 8'–6 | 1'–4½ | 7'–3 | 2'–9 | 4'–7½ | 4'–0 | 1'–6 | 5'–6 | 44 | 16 | 8 | 6 | 5 | 23 | 5 | 12 | 8 | 1'–0 | 9" |
| OH–20(R) | 5418+54.43(EB) | 19.89 | 2485 | 24'–0 | 12'–0 | 5'–9 | 8'–9 | 1'–6 | 7'–7½ | 3'–0 | 4'–6 | 4'–0 | 1'–6 | 5'–6 | 48 | 18 | 8 | 6 | 5 | 24 | 5 | 12 | 9 | 1'–0 | 9" |
| OH–22(L) | 3027+15.32(WB) | 9.17 | 951 | 15'–0 | 8'–0 | 4'–9 | 6'–9 | 1'–0 | 4'–1½ | 2'–0 | 3'–0 | 5'–0 | 1'–6 | 6'–6 | 28 | 10 | 8 | 4 | 6 | 15 | 4 | 8 | 5 | 1'–0 | 1'–3 |
| OH–22(R) | 3027+15.32(WB) | 8.33 | 906 | 15'–0 | 7'–0 | 4'–9 | 6'–9 | 1'–0 | 4'–1½ | 2'–0 | 2'–6 | 5'–0 | 1'–6 | 6'–6 | 28 | 10 | 8 | 4 | 6 | 15 | 4 | 7 | 5 | 1'–0 | 1'–3 |

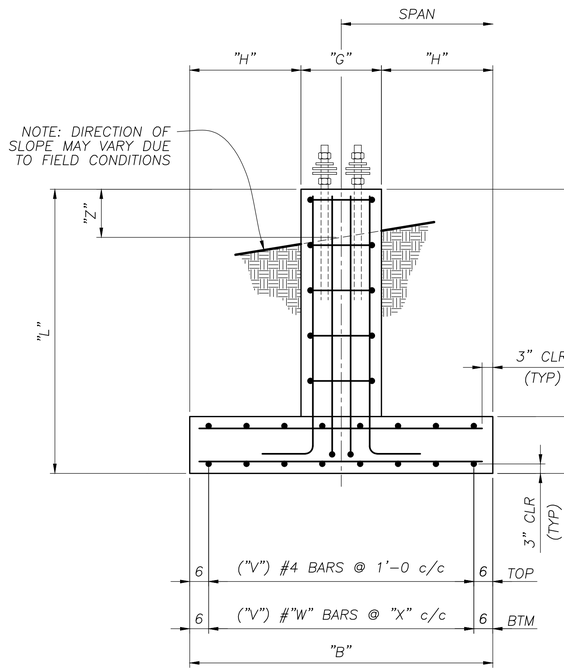


END VIEW

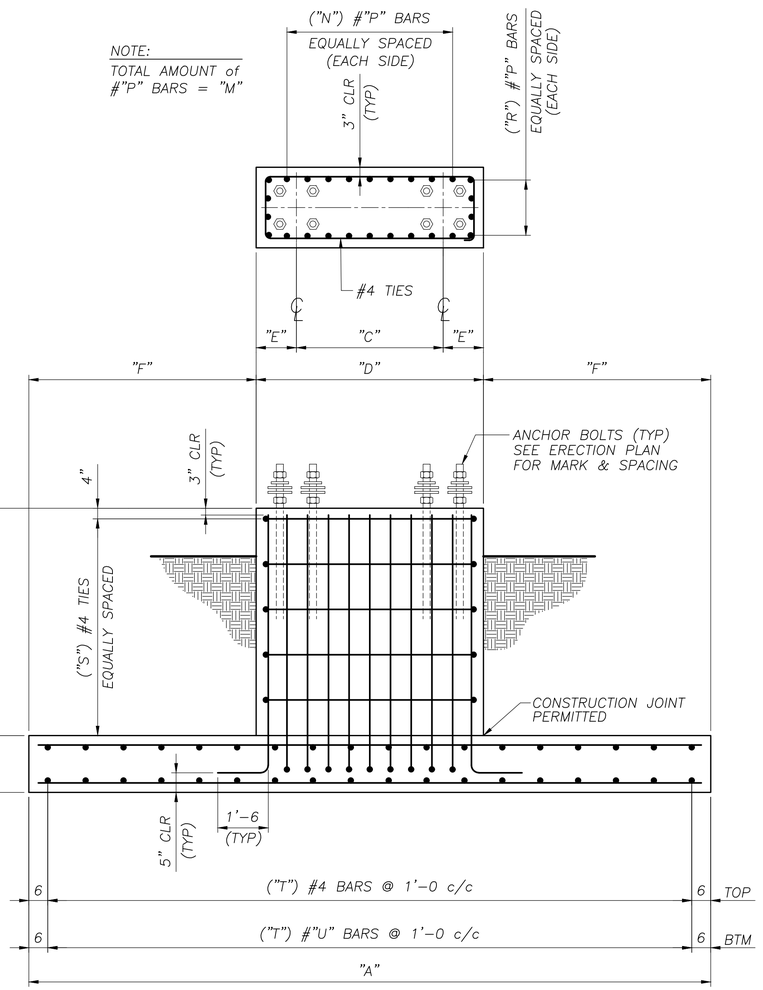


SIDE VIEW

(PARALLEL TO ROADWAY)

NOTE:

TOTAL AMOUNT of #"P" BARS = "M"

**NOTE:**

SEE GENERAL NOTES DRAWING FOR MATERIAL SPECIFICATIONS, FOUNDATION AND STANDARD NOTES

GROUP 2

AASHTO 6th Edition Spec's

SEALED BY:

SOUTH CAROLINA PROFESSIONAL ENGINEER
No. 38665
DAVID A LALONE

Oct 25 2023

walpar
A valmont COMPANY
POST OFFICE BOX 28650
BIRMINGHAM ALABAMA 35228
4200 JEFFERSON AVENUE
BIRMINGHAM ALABAMA 35221
PHONE (205)–925–4990
FAX (205) 925–7273

0

| | |
|---|---|
| STATE: | South Carolina |
| FED PROJ: | Carolina Crossroads Phase 1 & 2 |
| ST PROJ: | P039718 |
| COUNTY: | Lexington & Richland |
| ROUTE: | I–26 & I–126 |
| SUBJECT: | OVERHEAD SIGN SUPPORT SPREAD FOOTING DRAWING |
| FOR: | Archer–United Joint Venture |
| DRAWN BY: | IWL DATE: 8/24/23 |
| CHECKED BY: | RRW DATE: 9/14/23 |
| DWG NO: | C3546–D20 |

| NO: | REVISIONS | DATE | MADE | CHECKED |
|---|---|---|---|---|
| 0 | CHECK COMPLETE | 9/14/23 | IWL | RRW |

DP–SF–D

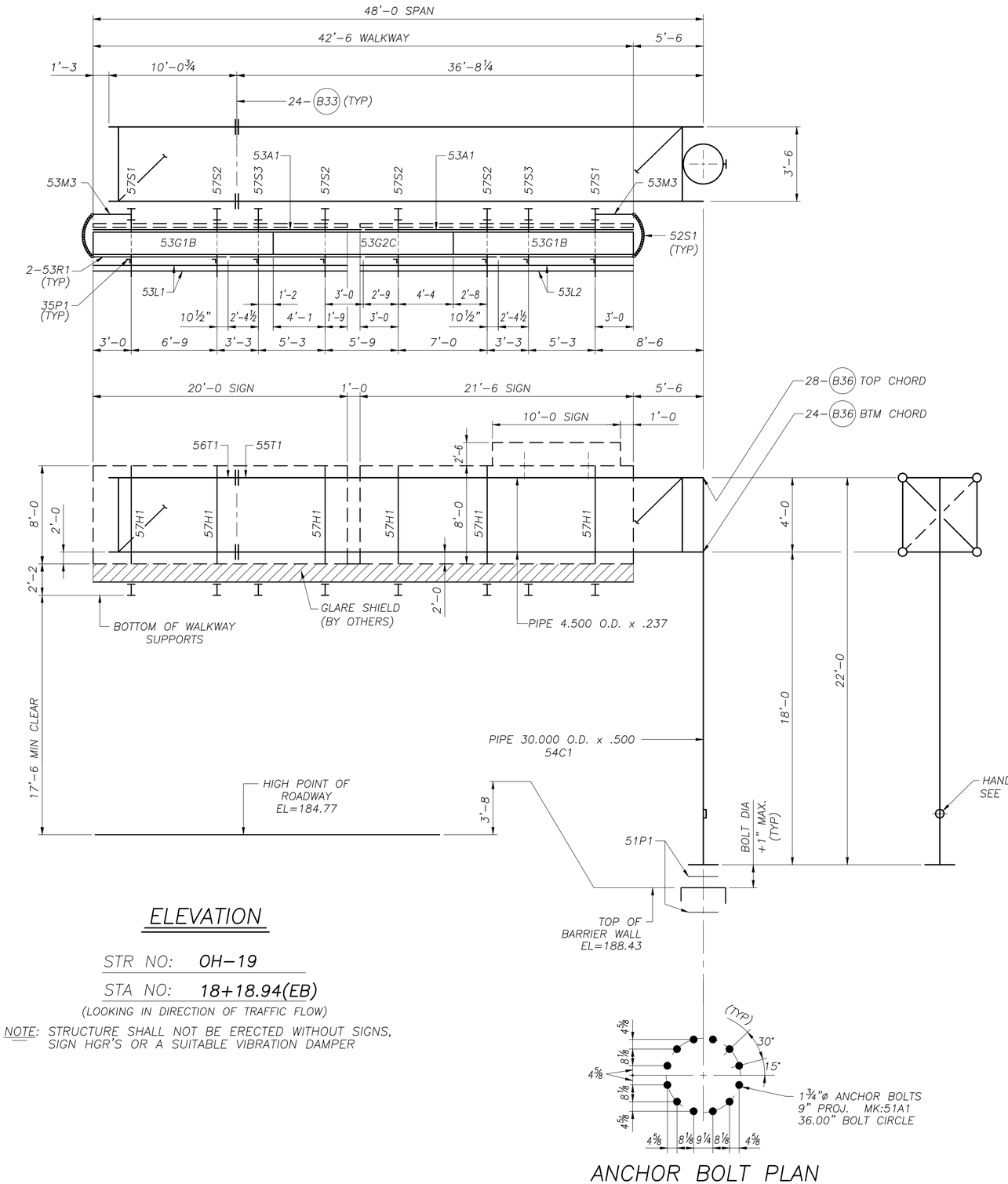


## ELEVATION

STR NO: OH-19

STA NO: 18+18.94(EB)

(LOOKING IN DIRECTION OF TRAFFIC FLOW)

NOTE: STRUCTURE SHALL NOT BE ERECTED WITHOUT SIGNS, SIGN HGR'S OR A SUITABLE VIBRATION DAMPER




## ANCHOR BOLT PLAN

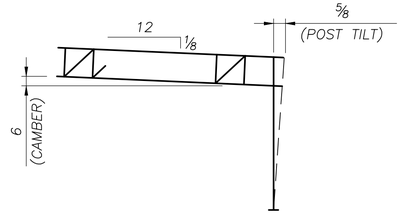


## CAMBER DIAGRAM

ERECTION NOTE

1) TILT POST AWAY FROM ROADWAY AT ERECTION BY ADJUSTING LEVELING NUTS.
2) 1" MINIMUM PERMANENT CAMBER AFTER DEFLECTION.

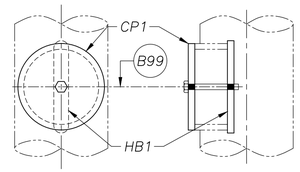


## HANDHOLE DETAIL

PRE ASSEMBLE CP1 TO HB1 WITH B99 BOLT. DISTURB THREADS SO HB1 CAN NOT BE REMOVED. INSTALL COVER ASSEMBLY INTO HANDHOLE OPENING AND TIGHTEN BOLT TO SECURE.

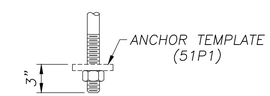


## ANCHOR DETAIL

(TYPICAL)

| SHIPPING LIST | | C3546-E8 |
|---|---|---|
| QTY | MARK | DESCRIPTION |
| 12 | 51A1 | ANCHOR BOLTS |
| 2 | 51P1 | ANCHOR TEMPLATES |
| 1 | 55T1 | CANTILEVER TRUSS 4.4' x 4.9' x 38.3' |
| 1 | 56T1 | CANTILEVER TRUSS 4.4' x 4.9' x 10.1' |
| 1 | 54C1 | CANTILEVER POST 3.4' x 3.4' x 22' |
| 2 | 57S3 | WALK SUPPORTS |
| 2 | 53M3 | SAFETY CHAIN SUPPORT |
| 2 | 52S1 | SAFETY CHAIN |
| 8 | 52P1 | HINGE PIN ASSEMBLIES |
| 16 | 53M1 | CLAMP PLATES |
| 4 | 53M2 | SPLICE PLATES |
| 8 | 53P1 | HANDRAIL POSTS |
| 8 | 53R1 | HANDRAILS |
| 2 | 53A1 | SAFETY ANGLES |
| 2 | 53G1B | GRATING |
| 1 | 53G2C | GRATING |
| 2 | 57S1 | SIGN/WALK/LIGHT SUPPORT |
| 4 | 57S2 | SIGN/WALK/LIGHT SUPPORT |
| 6 | 57H1 | SIGN HANGERS (ANGLE ARM) |
| 6 | 52M1 | EYEBOLT ASSEMBLIES |
| 2 | 53L1 | LIGHT SUPPORTS |
| 2 | 53L2 | LIGHT SUPPORTS |
| 1 | CP1 | COVER PLATE ASSEMBLY |
| 1 | HB1 | HANDHOLE BAR |
| | | |
| 48 | B1 | 3/8" x 1 1/4" BOLT w/HN/LW (A307 GALV) |
| 16 | B3 | 1 3/8" OD x 14 GA WASHER (A307 GALV) |
| 6 | B4 | 3/4" x 2 1/2" HHB w/HN/FW/LW (A325 GALV) |
| 6 | B5 | 3/4" x 2" HHB w/HN/LW (A325 GALV) |
| 8 | B6 | 1/2" x 1 1/2" HHB w/HN/LW (A325 GALV) |
| 24 | B33 | 3/4" x 3" HHB w/HN/FW/DTI (A325 GALV) |
| 52 | B36 | 3/4" x 2 1/2" HHB w/HN/FW/DTI (A325 GALV) |
| 1 | B99 | 1/4" x 4" HHB (A307 GALV) |
| 16 | U1 | 5/16" U-Bolts w/(2 ea) HN/LW (ZINC PL) |
| 32 | U4 | 1/2" U-Bolts w/(2 ea) HN/LW/FW (GALV) |

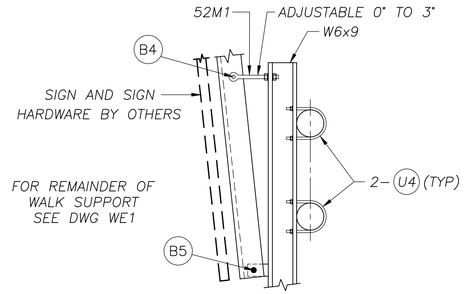


## TYP SECTION THRU SIGN SUPPORT & SIGN HANGER

NOTE: EXIT PANELS & SUPPORTS BY OTHERS

**NOTE:**

SEE GENERAL NOTES DRAWING FOR MATERIAL SPECIFICATIONS, FOUNDATION AND STANDARD NOTES

DESIGN DWGS: D10, D11, D13 DESIGN NO: BC2 AASHTO 6th Edition Spec's

OH-19

SEALED BY:

SOUTH CAROLINA PROFESSIONAL ENGINEER DAVID A LALLONE No. 38665

Oct 25 2023


walpar A valmont COMPANY

POST OFFICE BOX 28650
BIRMINGHAM ALABAMA 35228
4200 JEFFERSON AVENUE
BIRMINGHAM ALABAMA 35221
PHONE (205)-925-4990
FAX (205) 925-7273


| | |
|---|---|
| STATE: | South Carolina |
| FED PROJ: | Carolina Crossroads Phase 1 & 2 |
| ST PROJ: | P039718 |
| COUNTY: | Lexington & Richland |
| ROUTE: | I-26 & I-126 |
| SUBJECT: | CANTILEVER SIGN SUPPORT ERECTION DRAWING |
| FOR: | Archer-United Joint Venture |
| DRAWN BY: | DLK DATE: 9/28/23 |
| CHECKED BY: | DLJ DATE: 10/16/23 |
| DWG NO: | C3546-E8 |

| NO: | REVISIONS | DATE | MADE | CHECKED |
|---|---|---|---|---|
| 0 | CHECK COMPLETE | 10/16/23 | DLK | DLJ |

NAME: E:\acad\JobsNProg\3546\3546-E8.dwg DATE: OCT 16, 2023 TIME: 3:38 AM dj706290

CANT-E

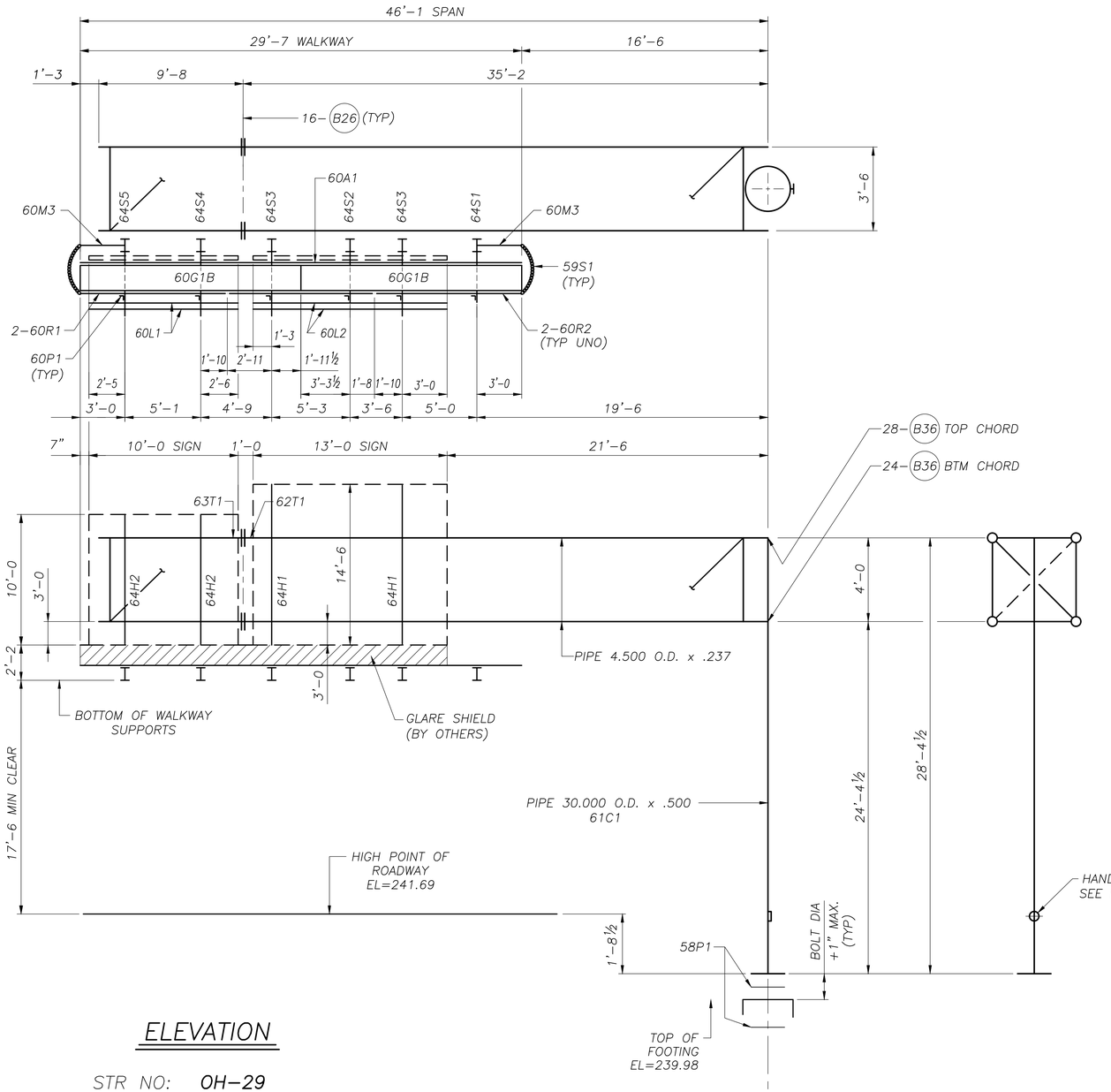


## ELEVATION

STR NO: **0H-29**

STA NO: **209+50.04(SB)**

(LOOKING IN DIRECTION OF TRAFFIC FLOW)

NOTE: STRUCTURE SHALL NOT BE ERECTED WITHOUT SIGNS, SIGN HGR'S OR A SUITABLE VIBRATION DAMPER

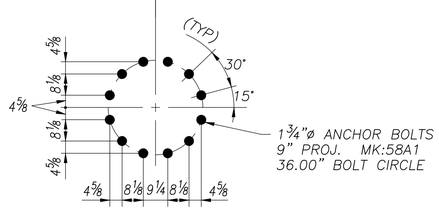


## ANCHOR BOLT PLAN

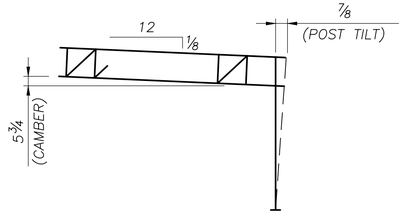


## CAMBER DIAGRAM

ERECTION NOTE

1) TILT POST AWAY FROM ROADWAY AT ERECTION BY ADJUSTING LEVELING NUTS.
2) 1" MINIMUM PERMANENT CAMBER AFTER DEFLECTION.

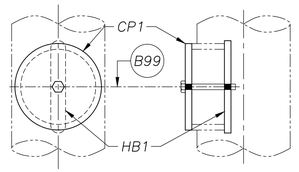


## HANDHOLE DETAIL

PRE ASSEMBLE CP1 TO HB1 WITH B99 BOLT. DISTURB THREADS SO HB1 CAN NOT BE REMOVED. INSTALL COVER ASSEMBLY INTO HANDHOLE OPENING AND TIGHTEN BOLT TO SECURE.

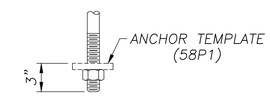


## ANCHOR DETAIL

(TYPICAL)

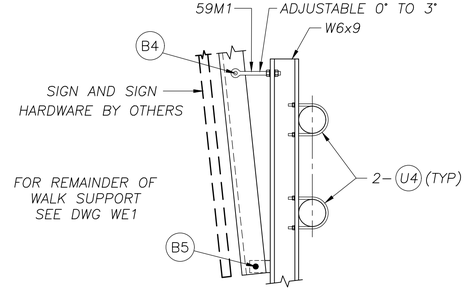


## TYP SECTION THRU SIGN SUPPORT & SIGN HANGER

| SHIPPING LIST | | C3546-E9 |
|---|---|---|
| QTY | MARK | DESCRIPTION |
| 12 | 58A1 | ANCHOR BOLTS |
| 2 | 58P1 | ANCHOR TEMPLATES |
| 1 | 62T1 | CANTILEVER TRUSS 4.4' x 4.9' x 36.8' |
| 1 | 63T1 | CANTILEVER TRUSS 4.4' x 4.9' x 9.7' |
| 1 | 61C1 | CANTILEVER POST 3.4' x 3.4' x 28.4' |
| 1 | 64S1 | WALK SUPPORT |
| 1 | 64S2 | WALK SUPPORT |
| 2 | 60M3 | SAFETY CHAIN SUPPORT |
| 2 | 59S1 | SAFETY CHAIN |
| 6 | 59P1 | HINGE PIN ASSEMBLIES |
| 12 | 60M1 | CLAMP PLATES |
| 2 | 60M2 | SPLICE PLATES |
| 6 | 60P1 | HANDRAIL POSTS |
| 2 | 60R1 | HANDRAILS |
| 4 | 60R2 | HANDRAILS |
| 1 | 60A1 | SAFETY ANGLES |
| 2 | 60G1B | GRATING |
| 2 | 64S3 | SIGN/WALK/LIGHT SUPPORTS |
| 1 | 64S4 | SIGN/WALK/LIGHT SUPPORT |
| 1 | 64S5 | SIGN/WALK/LIGHT SUPPORT |
| 2 | 64H1 | SIGN HANGERS (ANGLE ARM) |
| 2 | 64H2 | SIGN HANGERS (ANGLE ARM) |
| 4 | 59M1 | EYEBOLT ASSEMBLIES |
| 2 | 60L1 | LIGHT SUPPORTS |
| 2 | 60L2 | LIGHT SUPPORTS |
| 1 | CP1 | COVER PLATE ASSEMBLY |
| 1 | HB1 | HANDHOLE BAR |
| | | |
| 32 | B1 | 3/8" x 1 1/4" BOLT w/HN/LW (A307 GALV) |
| 12 | B3 | 1 3/8" OD x 14 GA WASHER (A307 GALV) |
| 4 | B4 | 3/4" x 2 1/2" HHB w/HN/FW/LW (A325 GALV) |
| 4 | B5 | 3/4" x 2" HHB w/HN/LW (A325 GALV) |
| 6 | B6 | 1/2" x 1 1/2" HHB w/HN/LW (A325 GALV) |
| 16 | B26 | 7/8" x 3" HHB w/HN/FW/DTI (A325 GALV) |
| 52 | B36 | 3/4" x 2 1/2" HHB w/HN/FW/DTI (A325 GALV) |
| 1 | B99 | 1/4" x 4" HHB (A307 GALV) |
| 12 | U1 | 5/16" U-Bolts w/(2 ea) HN/LW (ZINC PL) |
| 24 | U4 | 1/2" U-Bolts w/(2 ea) HN/LW/FW (GALV) |

**NOTE:**
SEE GENERAL NOTES DRAWING FOR MATERIAL SPECIFICATIONS, FOUNDATION AND STANDARD NOTES

DESIGN DWGS: D10, D12, D14 DESIGN NO: BC3 **AASHTO 6th Edition Spec's**

**0H-29**

SEALED BY:

SOUTH CAROLINA PROFESSIONAL ENGINEER DAVID A LALLONE No. 38665

Oct 25 2023


walpar A valmont COMPANY

POST OFFICE BOX 28650
BIRMINGHAM ALABAMA 35228
4200 JEFFERSON AVENUE
BIRMINGHAM ALABAMA 35221
PHONE (205)-925-4990
FAX (205) 925-7273


| | |
|---|---|
| STATE: | South Carolina |
| FED PROJ: | Carolina Crossroads Phase 1 & 2 |
| ST PROJ: | P039718 |
| COUNTY: | Lexington & Richland |
| ROUTE: | I-26 & I-126 |
| SUBJECT: | CANTILEVER SIGN SUPPORT ERECTION DRAWING |
| FOR: | Archer-United Joint Venture |
| DRAWN BY: | DLK DATE: 9/29/23 |
| CHECKED BY: | DLJ DATE: 10/16/23 |
| DWG NO: | C3546-E9 |

| NO: | REVISIONS | DATE | MADE | CHECKED |
|---|---|---|---|---|
| 0 | CHECK COMPLETE | 10/16/23 | DLK | DLJ |

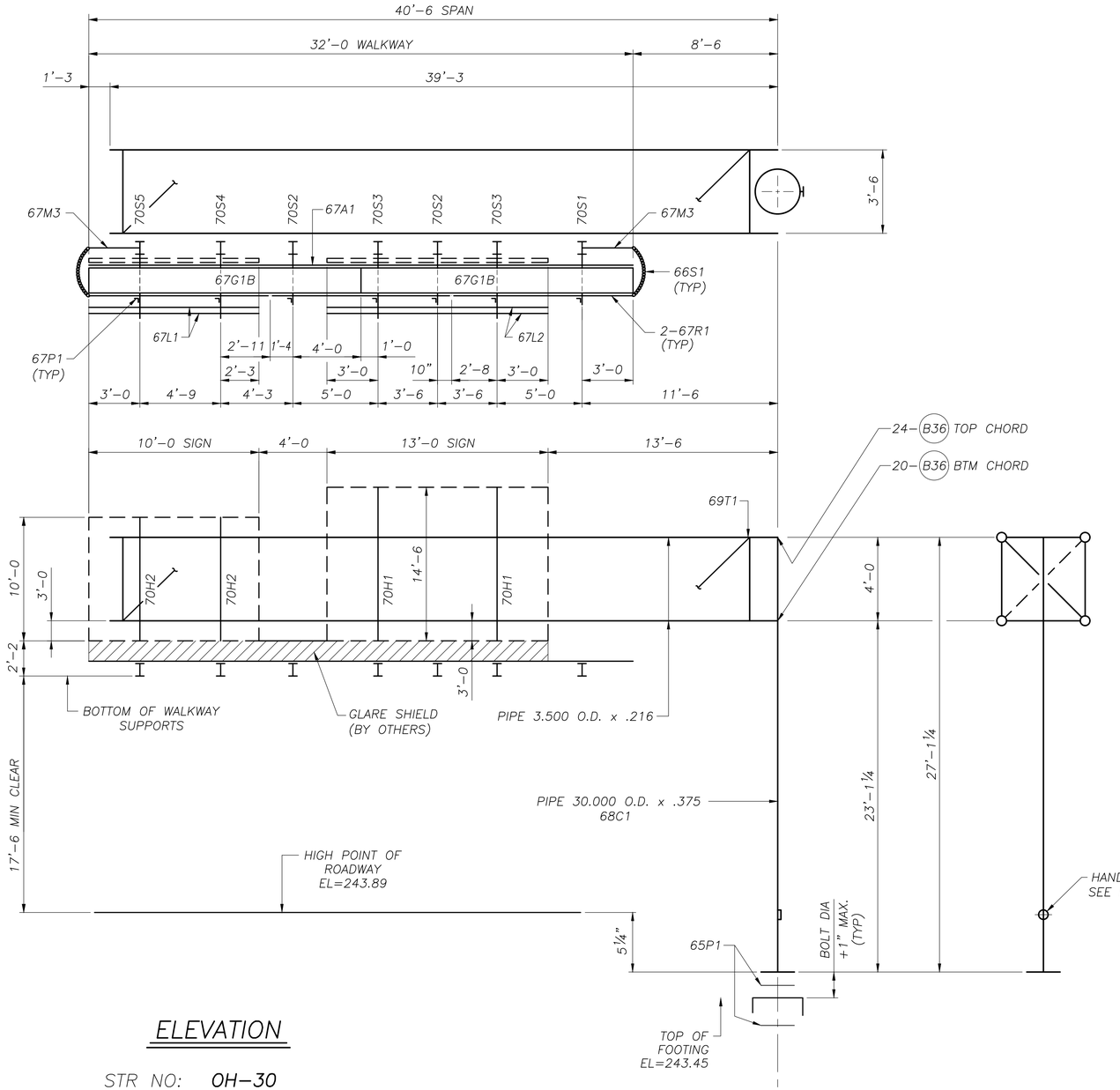


## ELEVATION

STR NO: OH-30

STA NO: 38+93.47(SB)

(LOOKING IN DIRECTION OF TRAFFIC FLOW)

NOTE: STRUCTURE SHALL NOT BE ERECTED WITHOUT SIGNS, SIGN HGR'S OR A SUITABLE VIBRATION DAMPER

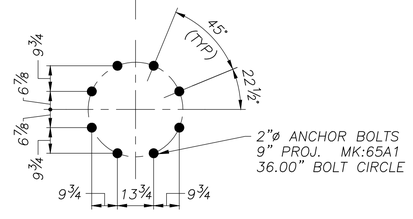


## ANCHOR BOLT PLAN

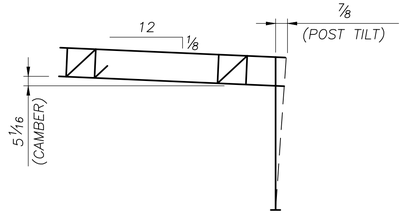


## CAMBER DIAGRAM

ERECTION NOTE

1) TILT POST AWAY FROM ROADWAY AT ERECTION BY ADJUSTING LEVELING NUTS.
2) 1" MINIMUM PERMANENT CAMBER AFTER DEFLECTION.

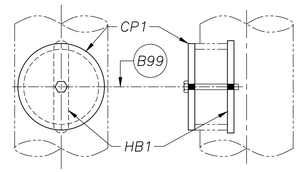


## HANDHOLE DETAIL

PRE ASSEMBLE CP1 TO HB1 WITH B99 BOLT. DISTURB THREADS SO HB1 CAN NOT BE REMOVED. INSTALL COVER ASSEMBLY INTO HANDHOLE OPENING AND TIGHTEN BOLT TO SECURE.

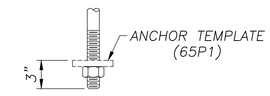


## ANCHOR DETAIL

(TYPICAL)

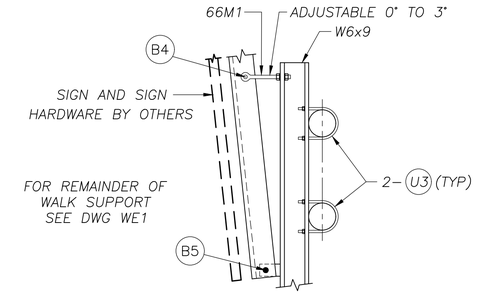


## TYP SECTION THRU SIGN SUPPORT & SIGN HANGER

| SHIPPING LIST | | C3546-E10 |
|---|---|---|
| QTY | MARK | DESCRIPTION |
| 8 | 65A1 | ANCHOR BOLTS |
| 2 | 65P1 | ANCHOR TEMPLATES |
| 1 | 69T1 | CANTILEVER TRUSS 3.9' x 4.4' x 40.9' |
| 1 | 68C1 | CANTILEVER POST 3.4' x 3.4' x 27.1' |
| 1 | 70S1 | WALK SUPPORTS |
| 2 | 70S2 | WALK SUPPORTS |
| 2 | 67M3 | SAFETY CHAIN SUPPORT |
| 2 | 66S1 | SAFETY CHAIN |
| 7 | 66P1 | HINGE PIN ASSEMBLIES |
| 14 | 67M1 | CLAMP PLATES |
| 2 | 67M2 | SPLICE PLATES |
| 7 | 67P1 | HANDRAIL POSTS |
| 6 | 67R1 | HANDRAILS |
| 1 | 67A1 | SAFETY ANGLES |
| 2 | 67G1B | GRATING |
| 2 | 70S3 | SIGN/WALK/LIGHT SUPPORTS |
| 1 | 70S4 | SIGN/WALK/LIGHT SUPPORT |
| 1 | 70S5 | SIGN/WALK/LIGHT SUPPORT |
| 2 | 70H1 | SIGN HANGERS (ANGLE ARM) |
| 2 | 70H2 | SIGN HANGERS (ANGLE ARM) |
| 4 | 66M1 | EYEBOLT ASSEMBLIES |
| 2 | 67L1 | LIGHT SUPPORTS |
| 2 | 67L2 | LIGHT SUPPORTS |
| 1 | CP1 | COVER PLATE ASSEMBLY |
| 1 | HB1 | HANDHOLE BAR |
| | | |
| 34 | (B1) | 3/8" x 1 1/4" BOLT w/HN/LW (A307 GALV) |
| 14 | (B3) | 1 3/8" OD x 14 GA WASHER (A307 GALV) |
| 4 | (B4) | 3/4" x 2 1/2" HHB w/HN/FW/LW (A325 GALV) |
| 4 | (B5) | 3/4" x 2" HHB w/HN/LW (A325 GALV) |
| 7 | (B6) | 1/2" x 1 1/2" HHB w/HN/LW (A325 GALV) |
| 44 | (B36) | 3/4" x 2 1/2" HHB w/HN/FW/DTI (A325 GALV) |
| 1 | (B99) | 1/4" x 4" HHB (A307 GALV) |
| 14 | (U1) | 5/16" U-Bolts w/(2 ea) HN/LW (ZINC PL) |
| 28 | (U3) | 1/2" U-Bolts w/(2 ea) HN/LW/FW (GALV) |

**NOTE:**
SEE GENERAL NOTES DRAWING FOR MATERIAL SPECIFICATIONS, FOUNDATION AND STANDARD NOTES

OH-30

DESIGN DWGS: D10, D12, D14 DESIGN NO: BC4 **AASHTO 6th Edition Spec's**

SEALED BY:

SOUTH CAROLINA PROFESSIONAL ENGINEER No. 38665 DAVID A LALLONE

Oct 25 2023

walpar
A valmont COMPANY
POST OFFICE BOX 28650
BIRMINGHAM ALABAMA 35228
4200 JEFFERSON AVENUE
BIRMINGHAM ALABAMA 35221
PHONE (205)-925-4990
FAX (205) 925-7273

| | |
|---|---|
| STATE: | South Carolina |
| FED PROJ: | Carolina Crossroads Phase 1 & 2 |
| ST PROJ: | P039718 |
| COUNTY: | Lexington & Richland |
| ROUTE: | I-26 & I-126 |
| SUBJECT: | CANTILEVER SIGN SUPPORT ERECTION DRAWING |
| FOR: | Archer-United Joint Venture |
| DRAWN BY: | DLK DATE: 9/29/23 |
| CHECKED BY: | DLJ DATE: 10/16/23 |
| DWG NO: | C3546-E10 |

| NO: | REVISIONS | DATE | MADE | CHECKED |
|---|---|---|---|---|
| 0 | CHECK COMPLETE | 10/16/23 | DLK | DLJ |

NAME: E:\acad\JobsNPrg\3546\3546-E10.dwg DATE: OCT 16, 2023 TIME: 3:38 AM dj706290

CANT-E

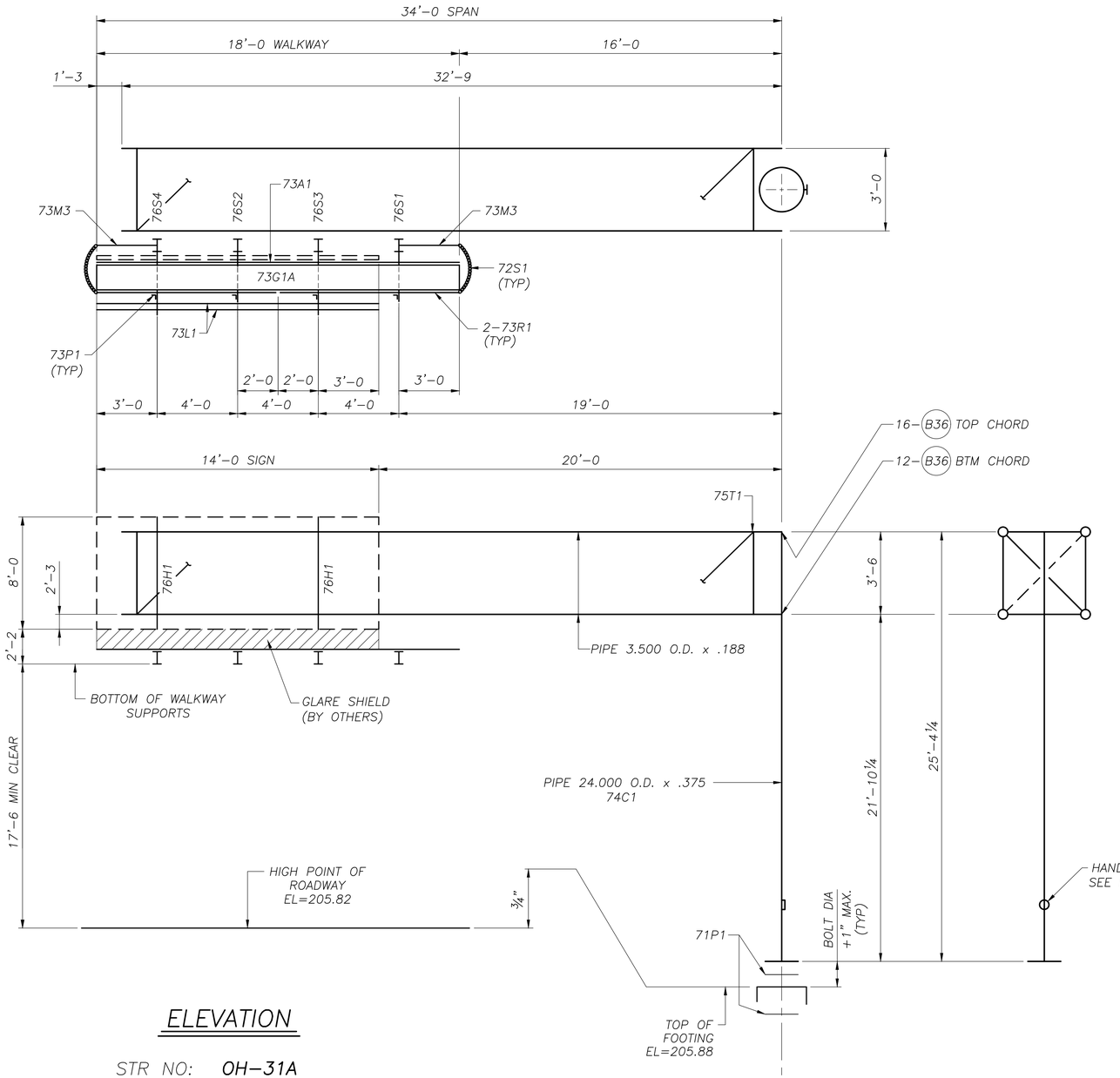


## ELEVATION

STR NO: OH-31A

STA NO: 51+00(EB)

(LOOKING IN DIRECTION OF TRAFFIC FLOW)

NOTE: STRUCTURE SHALL NOT BE ERECTED WITHOUT SIGNS, SIGN HGR'S OR A SUITABLE VIBRATION DAMPER

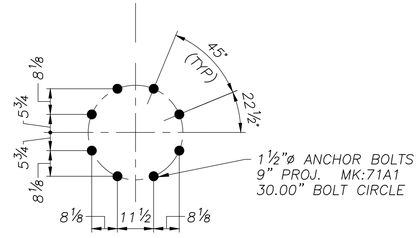


## ANCHOR BOLT PLAN

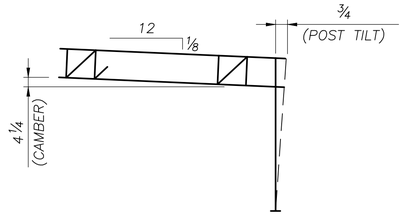


## CAMBER DIAGRAM

ERECTION NOTE

1) TILT POST AWAY FROM ROADWAY AT ERECTION BY ADJUSTING LEVELING NUTS.
2) 1" MINIMUM PERMANENT CAMBER AFTER DEFLECTION.

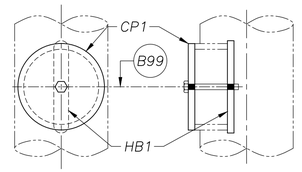


## HANDHOLE DETAIL

PRE ASSEMBLE CP1 TO HB1 WITH B99 BOLT. DISTURB THREADS SO HB1 CAN NOT BE REMOVED. INSTALL COVER ASSEMBLY INTO HANDHOLE OPENING AND TIGHTEN BOLT TO SECURE.

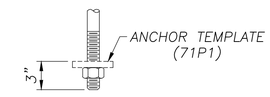


## ANCHOR DETAIL

(TYPICAL)

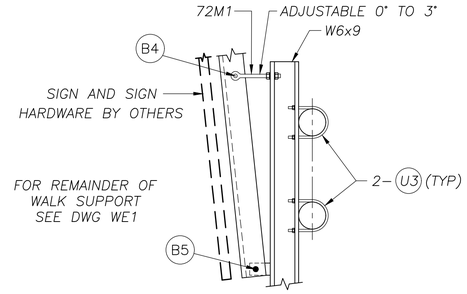


## TYP SECTION THRU SIGN SUPPORT & SIGN HANGER

| SHIPPING LIST | | C3546-E11 |
|---|---|---|
| QTY | MARK | DESCRIPTION |
| 8 | 71A1 | ANCHOR BOLTS |
| 2 | 71P1 | ANCHOR TEMPLATES |
| 1 | 75T1 | CANTILEVER TRUSS 3.3' x 3.8' x 34.1' |
| 1 | 74C1 | CANTILEVER POST 2.9' x 2.9' x 25.3' |
| 1 | 76S1 | WALK SUPPORT |
| 1 | 76S2 | WALK SUPPORT |
| 2 | 73M3 | SAFETY CHAIN SUPPORT |
| 2 | 72S1 | SAFETY CHAIN |
| 4 | 72P1 | HINGE PIN ASSEMBLIES |
| 8 | 73M1 | CLAMP PLATES |
| 4 | 73P1 | HANDRAIL POSTS |
| 4 | 73R1 | HANDRAILS |
| 1 | 73A1 | SAFETY ANGLES |
| 1 | 73G1A | GRATING |
| 1 | 76S3 | SIGN/WALK/LIGHT SUPPORT |
| 1 | 76S4 | SIGN/WALK/LIGHT SUPPORT |
| 2 | 76H1 | SIGN HANGERS (ANGLE ARM) |
| 2 | 72M1 | EYEBOLT ASSEMBLIES |
| 2 | 73L1 | LIGHT SUPPORTS |
| 1 | CP1 | COVER PLATE ASSEMBLY |
| 1 | HB1 | HANDHOLE BAR |
| | | |
| 16 | B1 | 3/8" x 1 1/4" BOLT w/HN/LW (A307 GALV) |
| 8 | B3 | 1 3/8" OD x 14 GA WASHER (A307 GALV) |
| 2 | B4 | 3/4" x 2 1/2" HHB w/HN/FW/LW (A325 GALV) |
| 2 | B5 | 3/4" x 2" HHB w/HN/LW (A325 GALV) |
| 4 | B6 | 1/2" x 1 1/2" HHB w/HN/LW (A325 GALV) |
| 28 | B36 | 3/4" x 2 1/2" HHB w/HN/FW/DTI (A325 GALV) |
| 1 | B99 | 1/4" x 4" HHB (A307 GALV) |
| 8 | U1 | 5/16" U-Bolts w/(2 ea) HN/LW (ZINC PL) |
| 16 | U3 | 1/2" U-Bolts w/(2 ea) HN/LW/FW (GALV) |

## NOTE:

SEE GENERAL NOTES DRAWING FOR MATERIAL SPECIFICATIONS, FOUNDATION AND STANDARD NOTES

DESIGN DWGS: D10, D12, D14 DESIGN NO: BC5 AASHTO 6th Edition Spec's

OH-31A

SEALED BY:

SOUTH CAROLINA PROFESSIONAL ENGINEER No. 38665 DAVID A LALLONE

Oct 25 2023

walpar A valmont COMPANY
POST OFFICE BOX 28650
BIRMINGHAM ALABAMA 35228
4200 JEFFERSON AVENUE
BIRMINGHAM ALABAMA 35221
PHONE (205)-925-4990
FAX (205) 925-7273

| NO: | REVISIONS | DATE | MADE | CHECKED |
|---|---|---|---|---|
| 0 | CHECK COMPLETE | 10/16/23 | DLK | DLJ |

| | |
|---|---|
| STATE: | South Carolina |
| FED PROJ: | Carolina Crossroads Phase 1 & 2 |
| ST PROJ: | P039718 |
| COUNTY: | Lexington & Richland |
| ROUTE: | I-26 & I-126 |
| SUBJECT: | CANTILEVER SIGN SUPPORT ERECTION DRAWING |
| FOR: | Archer-United Joint Venture |
| DRAWN BY: | DLK DATE: 10/2/23 |
| CHECKED BY: | DLJ DATE: 10/16/23 |
| DWG NO: | C3546-E11 |

CANT-E

NAME: E:\acad\JobsNPrg\3546\3546-E11.dwg DATE: OCT 16, 2023 TIME: 3:38 AM dj706290

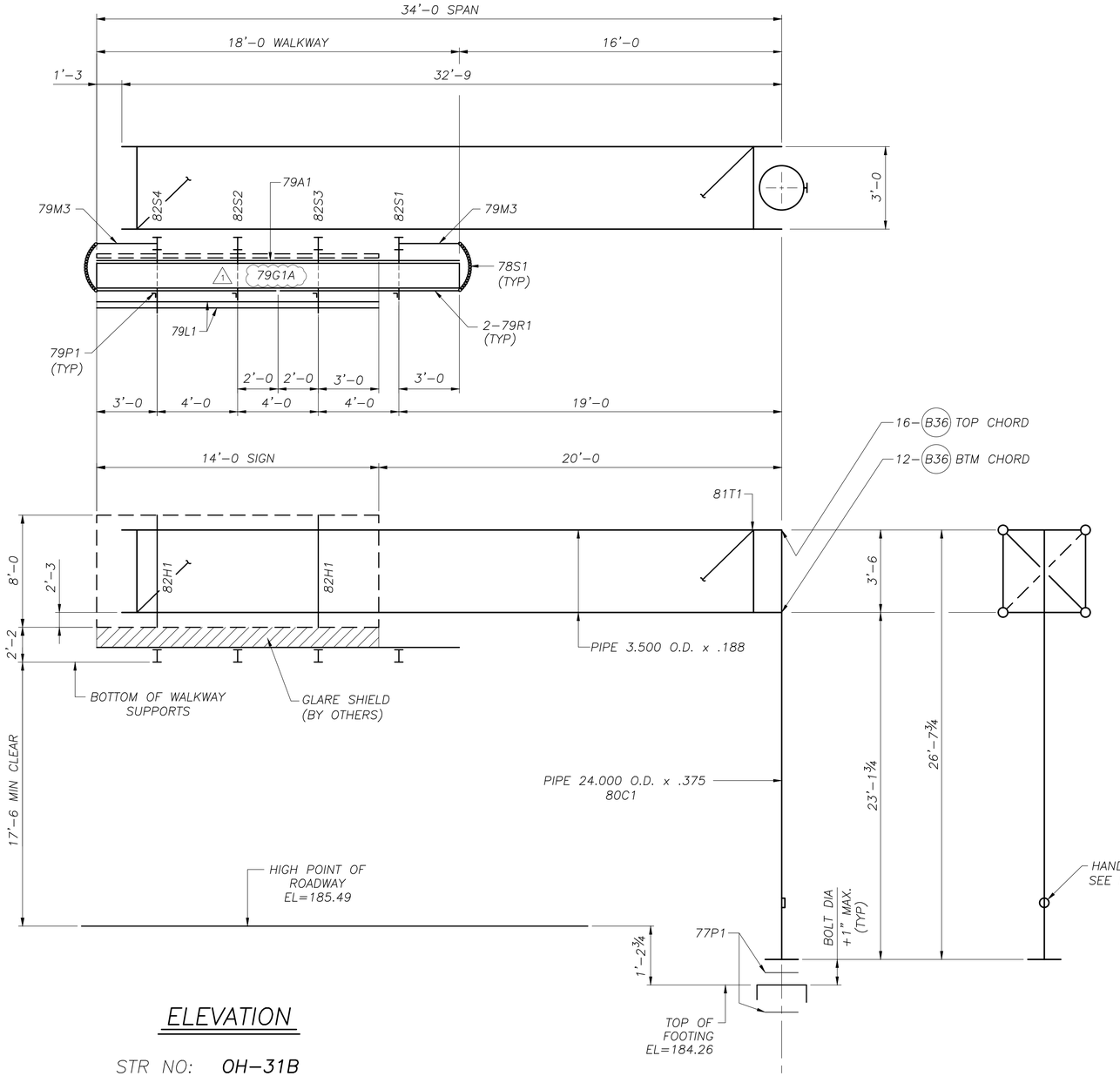


## ELEVATION

STR NO: OH-31B

STA NO: 66+00(EB)

(LOOKING IN DIRECTION OF TRAFFIC FLOW)

NOTE: STRUCTURE SHALL NOT BE ERECTED WITHOUT SIGNS, SIGN HGR'S OR A SUITABLE VIBRATION DAMPER

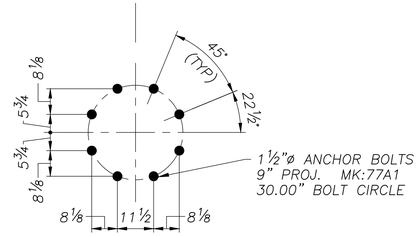


## ANCHOR BOLT PLAN

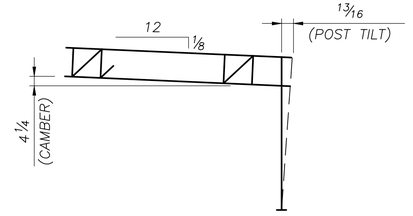


## CAMBER DIAGRAM

ERECTION NOTE

1) TILT POST AWAY FROM ROADWAY AT ERECTION BY ADJUSTING LEVELING NUTS.
2) 1" MINIMUM PERMANENT CAMBER AFTER DEFLECTION.

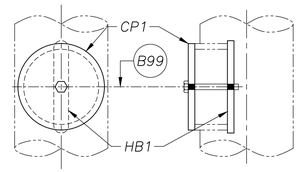


## HANDHOLE DETAIL

PRE ASSEMBLE CP1 TO HB1 WITH B99 BOLT. DISTURB THREADS SO HB1 CAN NOT BE REMOVED. INSTALL COVER ASSEMBLY INTO HANDHOLE OPENING AND TIGHTEN BOLT TO SECURE.

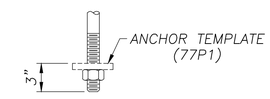


## ANCHOR DETAIL

(TYPICAL)

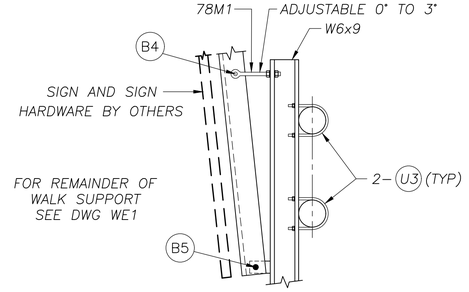


## TYP SECTION THRU SIGN SUPPORT & SIGN HANGER

| SHIPPING LIST | | C3546-E12 |
|---|---|---|
| QTY | MARK | DESCRIPTION |
| 8 | 77A1 | ANCHOR BOLTS |
| 2 | 77P1 | ANCHOR TEMPLATES |
| 1 | 81T1 | CANTILEVER TRUSS 3.3' x 3.8' x 34.1' |
| 1 | 80C1 | CANTILEVER POST 2.9' x 2.9' x 26.7' |
| 1 | 82S1 | WALK SUPPORT |
| 1 | 82S2 | WALK SUPPORT |
| 2 | 79M3 | SAFETY CHAIN SUPPORT |
| 2 | 78S1 | SAFETY CHAIN |
| 4 | 78P1 | HINGE PIN ASSEMBLIES |
| 8 | 79M1 | CLAMP PLATES |
| 4 | 79P1 | HANDRAIL POSTS |
| 4 | 79R1 | HANDRAILS |
| 1 | 79A1 | SAFETY ANGLES |
| 1 | 79G1A | GRATING |
| 1 | 82S3 | SIGN/WALK/LIGHT SUPPORT |
| 1 | 82S4 | SIGN/WALK/LIGHT SUPPORT |
| 2 | 82H1 | SIGN HANGERS (ANGLE ARM) |
| 2 | 78M1 | EYEBOLT ASSEMBLIES |
| 2 | 79L1 | LIGHT SUPPORTS |
| 1 | CP1 | COVER PLATE ASSEMBLY |
| 1 | HB1 | HANDHOLE BAR |
| | | |
| 16 | B1 | 3/8" x 1 1/4" BOLT w/HN/LW (A307 GALV) |
| 8 | B3 | 1 3/8" OD x 14 GA WASHER (A307 GALV) |
| 2 | B4 | 3/4" x 2 1/2" HHB w/HN/FW/LW (A325 GALV) |
| 2 | B5 | 3/4" x 2" HHB w/HN/LW (A325 GALV) |
| 4 | B6 | 1/2" x 1 1/2" HHB w/HN/LW (A325 GALV) |
| 28 | B36 | 3/4" x 2 1/2" HHB w/HN/FW/DTI (A325 GALV) |
| 1 | B99 | 1/4" x 4" HHB (A307 GALV) |
| 8 | U1 | 5/16" U-Bolts w/(2 ea) HN/LW (ZINC PL) |
| 16 | U3 | 1/2" U-Bolts w/(2 ea) HN/LW/FW (GALV) |

**NOTE:**
SEE GENERAL NOTES DRAWING FOR MATERIAL SPECIFICATIONS, FOUNDATION AND STANDARD NOTES

DESIGN DWGS: D10, D12, D14 DESIGN NO: BC6 AASHTO 6th Edition Spec's

OH-31B

SEALED BY:

SOUTH CAROLINA LICENSED PROFESSIONAL ENGINEER DAVID A LALLONE No. 38665

Feb 7 2024

walpar
A valmont COMPANY
POST OFFICE BOX 28650
BIRMINGHAM ALABAMA 35228
4200 JEFFERSON AVENUE
BIRMINGHAM ALABAMA 35221
PHONE (205)-925-4990
FAX (205) 925-7273

| | |
|---|---|
| STATE: | South Carolina |
| FED PROJ: | Carolina Crossroads Phase 1 & 2 |
| ST PROJ: | P039718 |
| COUNTY: | Lexington & Richland |
| ROUTE: | I-26 & I-126 |
| SUBJECT: | CANTILEVER SIGN SUPPORT ERECTION DRAWING |
| FOR: | Archer-United Joint Venture |
| DRAWN BY: | DLK DATE: 10/2/23 |
| CHECKED BY: | DLJ DATE: 10/16/23 |
| DWG NO: | C3546-E12 |

| NO: | REVISIONS | DATE | MADE | CHECKED |
|---|---|---|---|---|
| 1 | CORRECTED WALKWAY MARK | 2/6/24 | --- | DLJ |

CANT-E

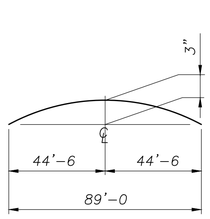


## CAMBER DIAGRAM

(PERMANENT CAMBER = 1¾")

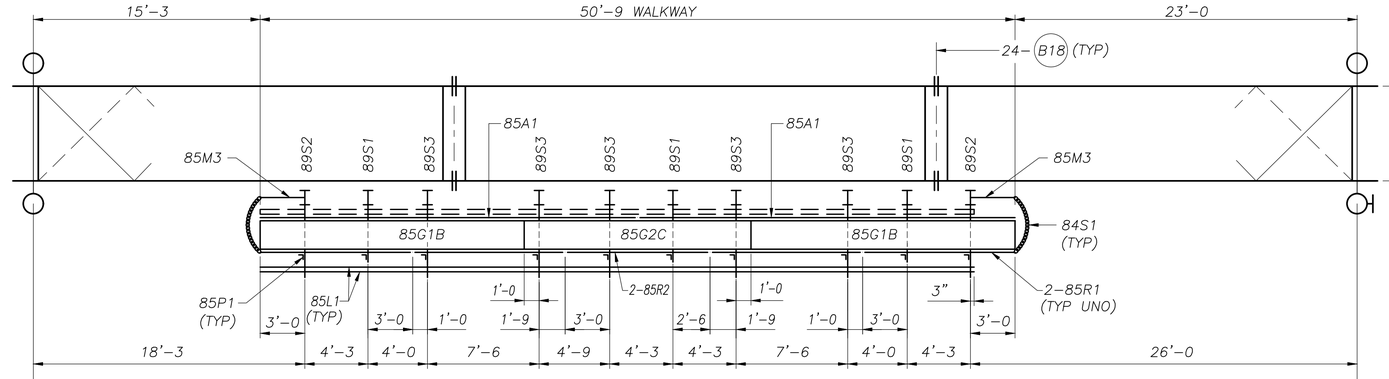


## ELEVATION

STR NO: OH-12

STA NO: 414+73.64(EB)

(LOOKING IN DIRECTION OF TRAFFIC FLOW)

NOTE: STRUCTURE SHALL NOT BE ERECTED WITHOUT SIGNS, SIGN HGR'S OR A SUITABLE VIBRATION DAMPER

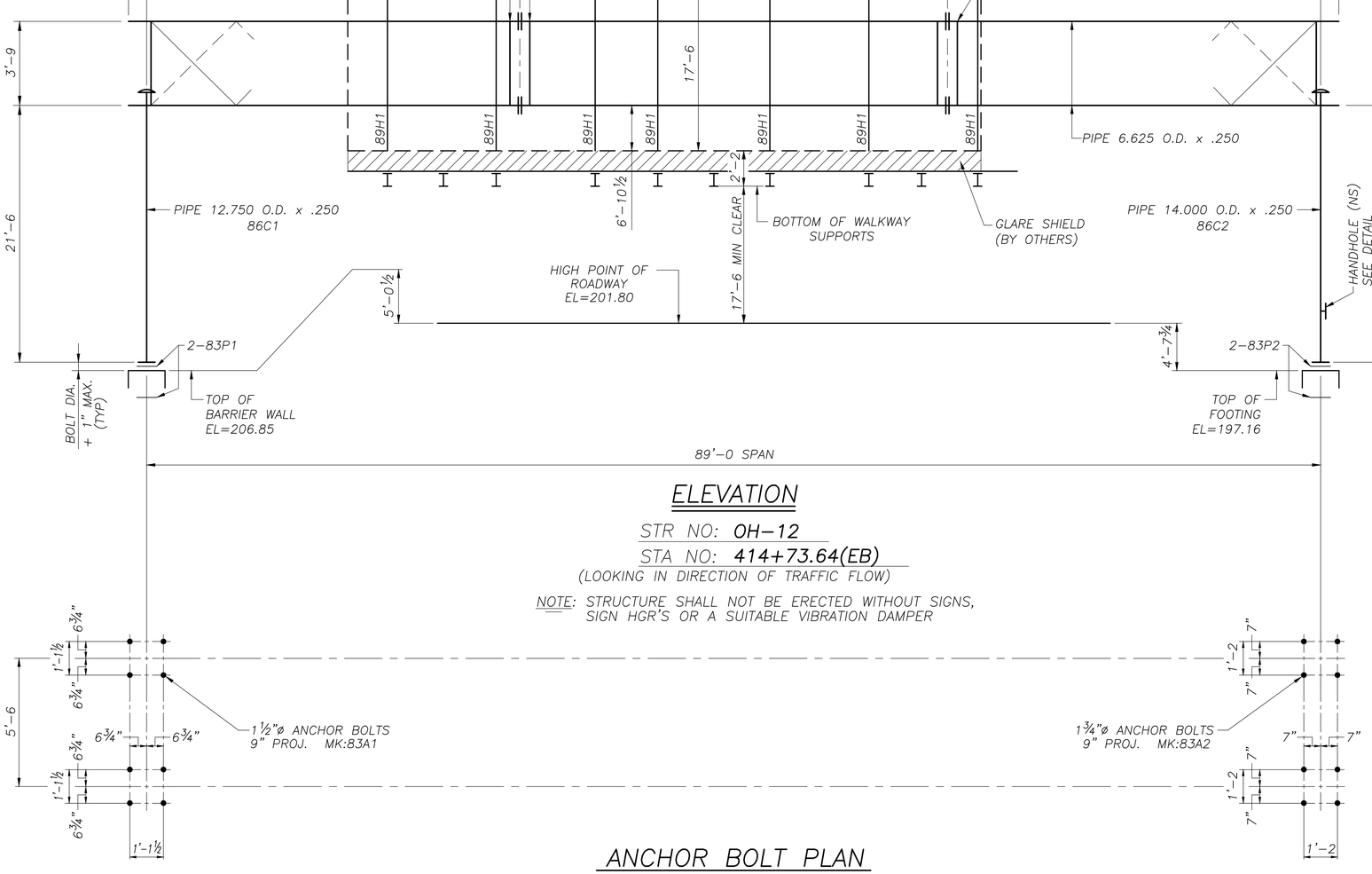


## ANCHOR BOLT PLAN

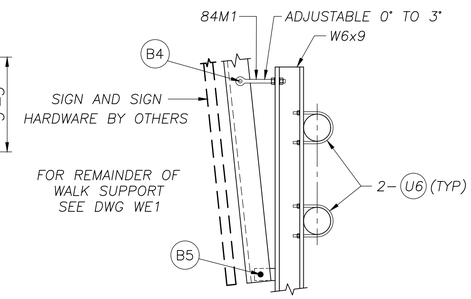


## TYP SECTION THRU SIGN SUPPORT & SIGN HANGER

NOTE: EXIT PANELS & SUPPORTS BY OTHERS

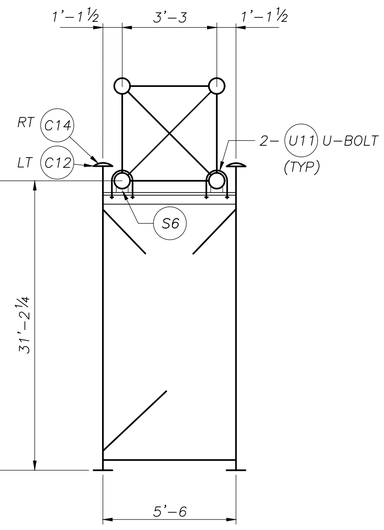


## TYPICAL UPRIGHT

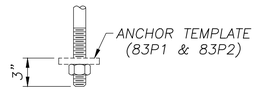


## ANCHOR DETAIL

(TYPICAL)

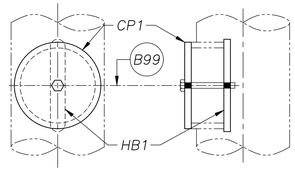


## HANDHOLE DETAIL

PRE ASSEMBLE CP1 TO HB1 WITH B99 BOLT.
DISTURB THREADS SO HB1 CAN NOT BE REMOVED.
INSTALL COVER ASSEMBLY INTO HANDHOLE OPENING AND TIGHTEN BOLT TO SECURE.

| SHIPPING LIST | | C3546-E13 |
|---|---|---|
| QTY | MARK | DESCRIPTION |
| 8 | 83A1 | ANCHOR BOLTS |
| 8 | 83A2 | ANCHOR BOLTS |
| 4 | 83P1 | ANCHOR TEMPLATES |
| 4 | 83P2 | ANCHOR TEMPLATES |
| 1 | 87T1 | BOX TRUSS 4.3' x 4.8' x 29.4' |
| 1 | 88T1 | BOX TRUSS 4.3' x 4.8' x 32.5' |
| 1 | 87T2 | BOX TRUSS 4.3' x 4.8' x 29.4' |
| 1 | 86C1 | UPRIGHT 7' x 1.5' x 21.6' |
| 1 | 86C2 | UPRIGHT 7.1' x 1.6' x 31.3' |
| 3 | 89S1 | WALK SUPPORT |
| 2 | 85M3 | SAFETY CHAIN SUPPORT |
| 2 | 84S1 | SAFETY CHAIN |
| 10 | 84P1 | HINGE PIN ASSEMBLIES |
| 20 | 85M1 | CLAMP PLATES |
| 4 | 85M2 | SPLICE PLATES |
| 10 | 85P1 | HANDRAIL POSTS |
| 8 | 85R1 | HANDRAILS |
| 2 | 85R2 | HANDRAILS |
| 2 | 85A1 | SAFETY ANGLES |
| 2 | 85G1B | GRATING |
| 1 | 85G2C | GRATING |
| 2 | 89S2 | SIGN/WALK/LIGHT SUPPORTS |
| 5 | 89S3 | SIGN/WALK/LIGHT SUPPORT |
| 7 | 89H1 | SIGN HANGERS (ANGLE ARM) |
| 7 | 84M1 | EYEBOLT ASSEMBLIES |
| 4 | 85L1 | LIGHT SUPPORTS |
| 1 | CP1 | COVER PLATE ASSEMBLY |
| 1 | HB1 | HANDHOLE BAR |
| | | |
| 54 | B1 | 3/8" x 1 1/4" BOLT w/HN/LW (A307 GALV) |
| 20 | B3 | 1 3/8" OD x 14 GA WASHER (A307 GALV) |
| 7 | B4 | 3/4" x 2 1/2" HHB w/HN/FW/LW (A325 GALV) |
| 7 | B5 | 3/4" x 2" HHB w/HN/LW (A325 GALV) |
| 10 | B6 | 1/2" x 1 1/2" HHB w/HN/LW (A325 GALV) |
| 48 | B18 | 1" x 3 3/4" HHB w/HN/FW/DTI (A325 GALV) |
| 1 | B99 | 1/4" x 4" HHB (A307 GALV) |
| 2 | C12 | POLE CAPS #291 w/ (2) 1/2" SET SCRS(S.S.) |
| 2 | C14 | POLE CAPS #283 w/ (2) 1/2" SET SCRS(S.S.) |
| 4 | S6 | SADDLE SHIMS #360 |
| 20 | U1 | 5/16" U-Bolts w/(2 ea) HN/LW (ZINC PL) |
| 40 | U6 | 1/2" U-Bolts w/(2 ea) HN/LW/FW (GALV) |
| 8 | U11 | 5/8" U-Bolts w/(2 ea) HN/LW/FW (GALV) |

**NOTE:**
SEE GENERAL NOTES DRAWING FOR MATERIAL SPECIFICATIONS, FOUNDATION AND STANDARD NOTES

DESIGN DWGS: D15, D17-D20 DESIGN NO: BT7 AASHTO 6th Edition Spec's

OH-12

SEALED BY:

SOUTH CAROLINA PROFESSIONAL ENGINEER DAVID A LALLONE No. 38665

Oct 25 2023

walpar
A valmont COMPANY
POST OFFICE BOX 28650
BIRMINGHAM ALABAMA 35228
4200 JEFFERSON AVENUE
BIRMINGHAM ALABAMA 35221
PHONE (205)-925-4990
FAX (205) 925-7273

| | |
|---|---|
| STATE: | South Carolina |
| FED PROJ: | Carolina Crossroads Phase 1 & 2 |
| ST PROJ: | P039718 |
| COUNTY: | Lexington & Richland |
| ROUTE: | I-26 & I-126 |
| SUBJECT: | OVERHEAD BOX TRUSS STRUCTURE ERECTION DRAWING |
| FOR: | Archer-United Joint Venture |
| DRAWN BY: | DLK DATE: 10/3/23 |
| CHECKED BY: | DLJ DATE: 10/16/23 |
| DWG NO: | C3546-E13 |

| NO: | REVISIONS | DATE | MADE | CHECKED |
|---|---|---|---|---|
| 0 | CHECK COMPLETE | 10/16/23 | DLK | DLJ |

BT-E

NAME: E:\acad\JobsNProg\3546\3546-E13.dwg DATE: OCT 16, 2023 TIME: 3:37 AM dj706290

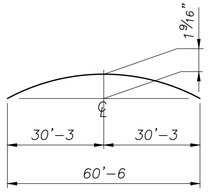


## CAMBER DIAGRAM

(PERMANENT CAMBER = 1¼")

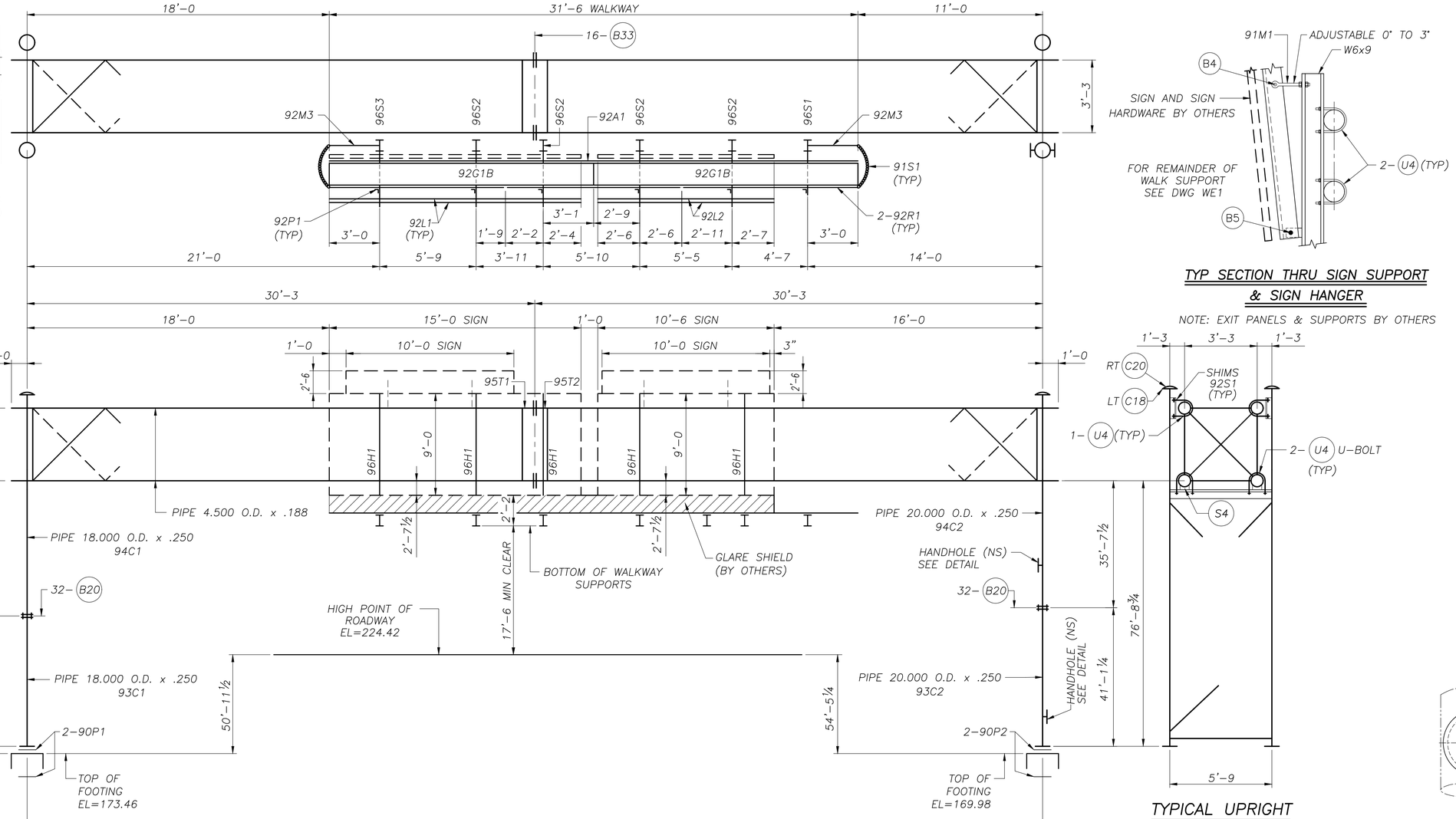


## ELEVATION

STR NO: OH-20

STA NO: 5418+54.43(EB)

(LOOKING IN DIRECTION OF TRAFFIC FLOW)

NOTE: STRUCTURE SHALL NOT BE ERECTED WITHOUT SIGNS, SIGN HGR'S OR A SUITABLE VIBRATION DAMPER




## ANCHOR BOLT PLAN




## TYP SECTION THRU SIGN SUPPORT & SIGN HANGER

NOTE: EXIT PANELS & SUPPORTS BY OTHERS




## TYPICAL UPRIGHT




## ANCHOR DETAIL

(TYPICAL)

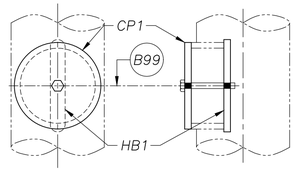


## HANDHOLE DETAIL

PRE ASSEMBLE CP1 TO HB1 WITH B99 BOLT.
DISTURB THREADS SO HB1 CAN NOT BE REMOVED.
INSTALL COVER ASSEMBLY INTO HANDHOLE OPENING AND TIGHTEN BOLT TO SECURE.

| SHIPPING LIST | | C3546-E14 |
|---|---|---|
| QTY | MARK | DESCRIPTION |
| 16 | 90A1 | ANCHOR BOLTS |
| 4 | 90P1 | ANCHOR TEMPLATES |
| 4 | 90P2 | ANCHOR TEMPLATES |
| 1 | 95T1 | BOX TRUSS 4.1' x 4.6' x 31.3' |
| 1 | 95T2 | BOX TRUSS 4.1' x 4.6' x 31.3' |
| 1 | 94C1 | UPRIGHT 7.9' x 2.1' x 41.3' |
| 1 | 94C2 | UPRIGHT 8.0' x 2.3' x 40.2' |
| 1 | 93C1 | UPRIGHT STUB 7.9' x 2.1' x 36.6' |
| 1 | 93C2 | UPRIGHT STUB 8.0' x 2.3' x 41.2' |
| 1 | 96S1 | WALK SUPPORT |
| 2 | 92M3 | SAFETY CHAIN SUPPORT |
| 2 | 91S1 | SAFETY CHAIN |
| 6 | 91P1 | HINGE PIN ASSEMBLIES |
| 12 | 92M1 | CLAMP PLATES |
| 2 | 92M2 | SPLICE PLATES |
| 6 | 92P1 | HANDRAIL POSTS |
| 6 | 92R1 | HANDRAILS |
| 1 | 92A1 | SAFETY ANGLE |
| 2 | 92G1B | GRATING |
| 4 | 92S1 | SHIMS |
| 4 | 96S2 | SIGN/WALK/LIGHT SUPPORTS |
| 1 | 96S3 | SIGN/WALK/LIGHT SUPPORT |
| 5 | 96H1 | SIGN HANGERS (ANGLE ARM) |
| 5 | 91M1 | EYEBOLT ASSEMBLIES |
| 2 | 92L1 | LIGHT SUPPORTS |
| 2 | 92L2 | LIGHT SUPPORTS |
| 2 | CP1 | COVER PLATE ASSEMBLY |
| 2 | HB1 | HANDHOLE BAR |
| | | |
| 34 | B1 | 3/8" x 1 1/4" BOLT w/HN/LW (A307 GALV) |
| 12 | B3 | 1 3/8" OD x 14 GA WASHER (A307 GALV) |
| 5 | B4 | 3/4" x 2 1/2" HHB w/HN/FW/LW (A325 GALV) |
| 5 | B5 | 3/4" x 2" HHB w/HN/LW (A325 GALV) |
| 6 | B6 | 1/2" x 1 1/2" HHB w/HN/LW (A325 GALV) |
| 64 | B20 | 1" x 4 1/4" HHB w/HN/FW/DTI (A325 GALV) |
| 16 | B33 | 3/4" x 3" HHB w/HN/FW/DTI (A325 GALV) |
| 2 | B99 | 1/4" x 4" HHB (A307 GALV) |
| 2 | C18 | POLE CAPS #390 w/ (2) 1/2" SET SCRS(S.S.) |
| 2 | C20 | POLE CAPS #394 w/ (2) 1/2" SET SCRS(S.S.) |
| 4 | S4 | SADDLE SHIMS #350 |
| 12 | U1 | 5/16" U-Bolts w/(2 ea) HN/LW (ZINC PL) |
| 36 | U4 | 1/2" U-Bolts w/(2 ea) HN/LW/FW (GALV) |

## NOTE:

SEE GENERAL NOTES DRAWING FOR MATERIAL SPECIFICATIONS, FOUNDATION AND STANDARD NOTES

DESIGN DWGS: D16, D18, D20 DESIGN NO: BT8 AASHTO 6th Edition Spec's

OH-20

SEALED BY:

SOUTH CAROLINA PROFESSIONAL ENGINEER DAVID A LALLONE No. 38665

Oct 25 2023

| NO: | REVISIONS | DATE | MADE | CHECKED |
|---|---|---|---|---|
| 0 | CHECK COMPLETE | 10/16/23 | DLK | DLJ |


walpar A valmont COMPANY

POST OFFICE BOX 28650
BIRMINGHAM ALABAMA 35228
4200 JEFFERSON AVENUE
BIRMINGHAM ALABAMA 35221
PHONE (205)-925-4990
FAX (205) 925-7273


| | |
|---|---|
| STATE: | South Carolina |
| FED PROJ: | Carolina Crossroads Phase 1 & 2 |
| ST PROJ: | P039718 |
| COUNTY: | Lexington & Richland |
| ROUTE: | I-26 & I-126 |
| SUBJECT: | OVERHEAD BOX TRUSS STRUCTURE ERECTION DRAWING |
| FOR: | Archer-United Joint Venture |
| DRAWN BY: | DLK DATE: 10/4/23 |
| CHECKED BY: | DLJ DATE: 10/16/23 |
| DWG NO: | C3546-E14 |

BT-E

NAME: E:\acad\JobsNPrg\3546\3546-E14.dwg DATE: OCT 16, 2023 TIME: 3:37 AM dj706290

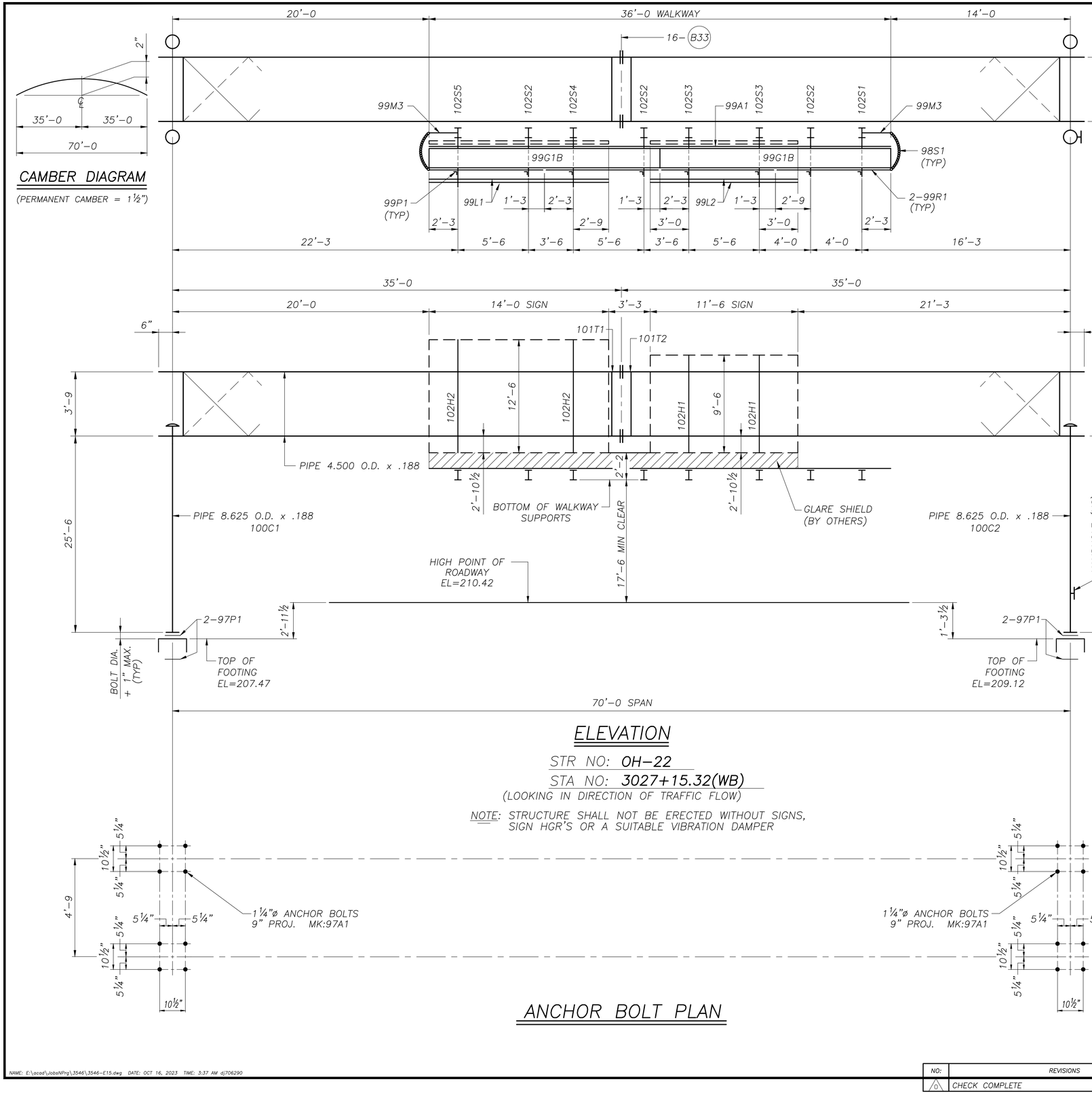





## CAMBER DIAGRAM

(PERMANENT CAMBER = 1½")

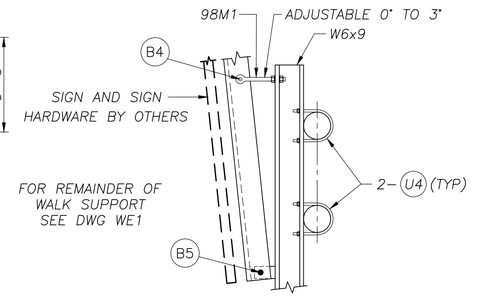


## TYP SECTION THRU SIGN SUPPORT & SIGN HANGER

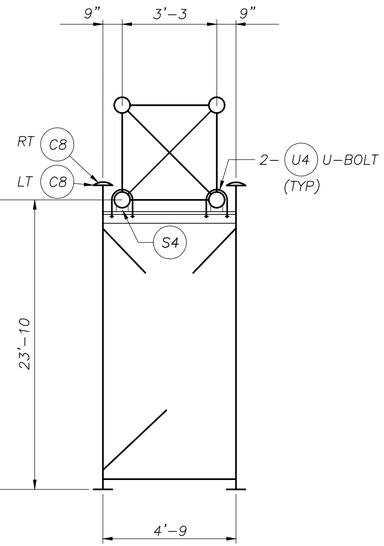


## TYPICAL UPRIGHT

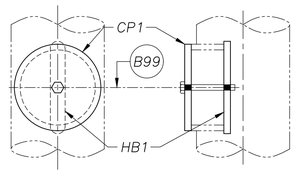


## HANDHOLE DETAIL

PRE ASSEMBLE CP1 TO HB1 WITH B99 BOLT.
DISTURB THREADS SO HB1 CAN NOT BE REMOVED.
INSTALL COVER ASSEMBLY INTO HANDHOLE
OPENING AND TIGHTEN BOLT TO SECURE.

## ELEVATION

STR NO: OH-22
STA NO: 3027+15.32(WB)
(LOOKING IN DIRECTION OF TRAFFIC FLOW)

NOTE: STRUCTURE SHALL NOT BE ERECTED WITHOUT SIGNS, SIGN HGR'S OR A SUITABLE VIBRATION DAMPER

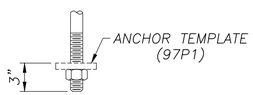


## ANCHOR DETAIL

(TYPICAL)

## ANCHOR BOLT PLAN

| SHIPPING LIST | | C3546-E15 |
|---|---|---|
| QTY | MARK | DESCRIPTION |
| 16 | 97A1 | ANCHOR BOLTS |
| 8 | 97P1 | ANCHOR TEMPLATES |
| 1 | 101T1 | BOX TRUSS 4.1' x 4.6' x 35.6' |
| 1 | 101T2 | BOX TRUSS 4.1' x 4.6' x 35.6' |
| 1 | 100C1 | UPRIGHT 6' x 1.3' x 25.7' |
| 1 | 100C2 | UPRIGHT 6' x 1.3' x 24' |
| 1 | 102S1 | WALK SUPPORT |
| 3 | 102S2 | WALK SUPPORTS |
| 2 | 99M3 | SAFETY CHAIN SUPPORT |
| 2 | 98S1 | SAFETY CHAIN |
| 8 | 98P1 | HINGE PIN ASSEMBLIES |
| 16 | 99M1 | CLAMP PLATES |
| 2 | 99M2 | SPLICE PLATES |
| 8 | 99P1 | HANDRAIL POSTS |
| 8 | 99R1 | HANDRAILS |
| 1 | 99A1 | SAFETY ANGLES |
| 2 | 99G1B | GRATING |
| 2 | 102S3 | SIGN/WALK/LIGHT SUPPORTS |
| 1 | 102S4 | SIGN/WALK/LIGHT SUPPORT |
| 1 | 102S5 | SIGN/WALK/LIGHT SUPPORT |
| 2 | 102H1 | SIGN HANGERS (ANGLE ARM) |
| 2 | 102H2 | SIGN HANGERS (ANGLE ARM) |
| 4 | 98M1 | EYEBOLT ASSEMBLIES |
| 2 | 99L1 | LIGHT SUPPORTS |
| 2 | 99L2 | LIGHT SUPPORTS |
| 1 | CP1 | COVER PLATE ASSEMBLY |
| 1 | HB1 | HANDHOLE BAR |
| | | |
| 36 | B1 | 3/8" x 1 1/4" BOLT w/HN/LW (A307 GALV) |
| 16 | B3 | 1 3/8" OD x 14 GA WASHER (A307 GALV) |
| 4 | B4 | 3/4" x 2 1/2" HHB w/HN/FW/LW (A325 GALV) |
| 4 | B5 | 3/4" x 2" HHB w/HN/LW (A325 GALV) |
| 8 | B6 | 1/2" x 1 1/2" HHB w/HN/LW (A325 GALV) |
| 16 | B33 | 3/4" x 3" HHB w/HN/FW/DTI (A325 GALV) |
| 1 | B99 | 1/4" x 4" HHB (A307 GALV) |
| 4 | C8 | POLE CAPS #388 w/ (2) 1/2" SET SCRS(S.S.) |
| 4 | S4 | SADDLE SHIMS #350 |
| 16 | U1 | 5/16" U-Bolts w/(2 ea) HN/LW (ZINC PL) |
| 40 | U4 | 1/2" U-Bolts w/(2 ea) HN/LW/FW (GALV) |

## NOTE:

SEE GENERAL NOTES DRAWING FOR MATERIAL SPECIFICATIONS, FOUNDATION AND STANDARD NOTES

DESIGN DWGS: D15, D18, D20 DESIGN NO: BT9 **AASHTO 6th Edition Spec's**

OH-22

SEALED BY:




Oct 25 2023


walpar
A valmont COMPANY
POST OFFICE BOX 28650
BIRMINGHAM ALABAMA 35228
4200 JEFFERSON AVENUE
BIRMINGHAM ALABAMA 35221
PHONE (205)-925-4990
FAX (205) 925-7273


| | |
|---|---|
| STATE: | South Carolina |
| FED PROJ: | Carolina Crossroads Phase 1 & 2 |
| ST PROJ: | P039718 |
| COUNTY: | Lexington & Richland |
| ROUTE: | I-26 & I-126 |
| SUBJECT: | OVERHEAD BOX TRUSS STRUCTURE ERECTION DRAWING |
| FOR: | Archer-United Joint Venture |
| DRAWN BY: | DLK DATE: 10/4/23 |
| CHECKED BY: | DLJ DATE: 10/16/23 |
| DWG NO: | C3546-E15 |

| NO: | REVISIONS | DATE | MADE | CHECKED |
|---|---|---|---|---|
| 0 | CHECK COMPLETE | 10/16/23 | DLK | DLJ |

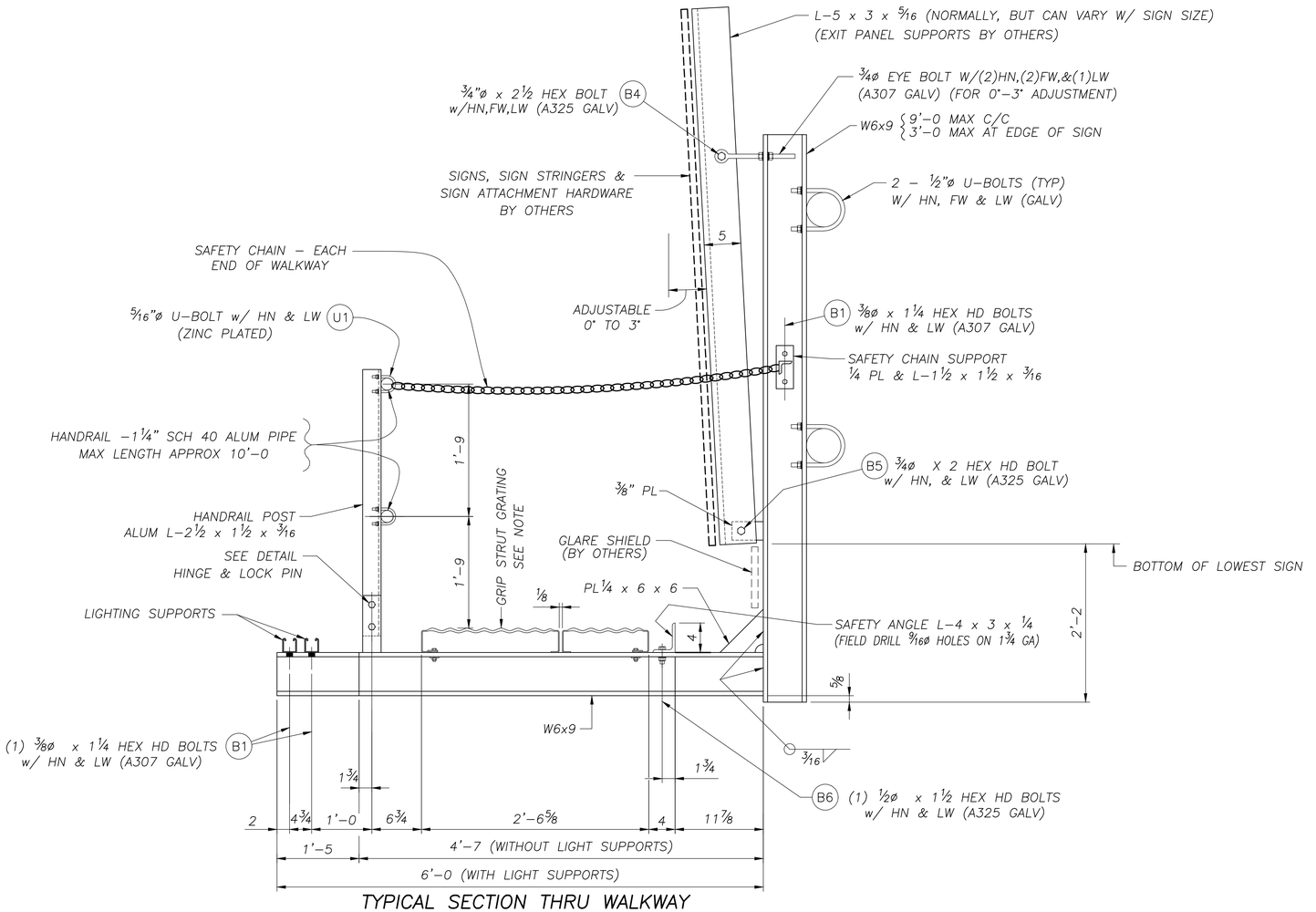


## TYPICAL SECTION THRU WALKWAY

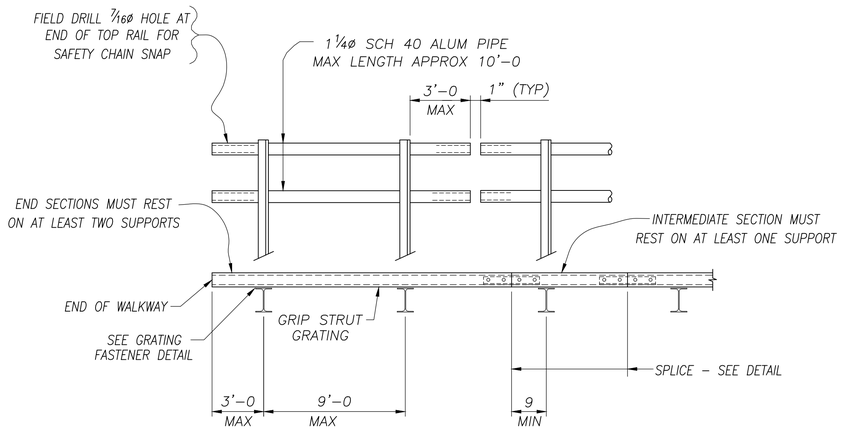


## ELEVATION OF WALKWAY

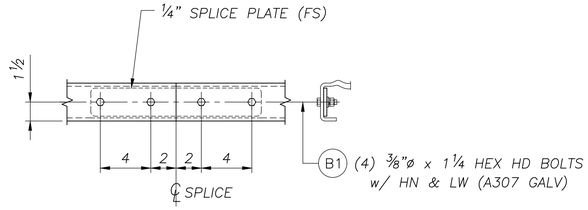


## GRATING SPLICE DETAIL

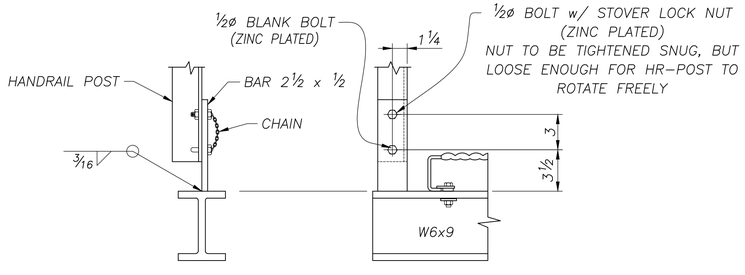


## HINGE & LOCKPIN DETAIL

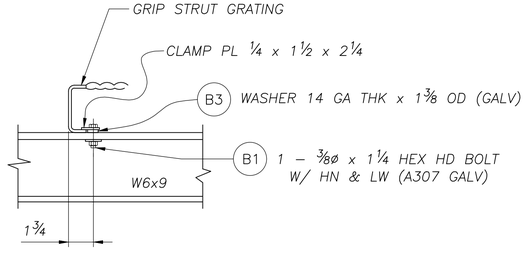


## GRATING FASTENER DETAIL

## MISC NOTES:

1. GRATING TO BE "GRIP STRUT" SAFETY GRATING OR EQUAL, #5 DIAMOND 11 3/4" WIDTH, 3" DEEP, CAT #53012 & #8 DIAMOND 18 3/4" WIDTH, 3" DEEP, CAT #83012 TACK WELDED TOGETHER TO FORM WALKWAY 30 5/8" WIDE. GALVANIZED AFTER FABRICATION
2. UNISTRUT LENGTHS TO BE EQUAL TO EACH INDIVIDUAL SIGN LENGTHS.

## NOTE:

SEE GENERAL NOTES DRAWING FOR MATERIAL SPECIFICATIONS, FOUNDATION AND STANDARD NOTES

AASHTO 6th Edition Spec's

SEALED BY:

SOUTH CAROLINA PROFESSIONAL ENGINEER
No. 38665
DAVID A LALLONE

Sep 8 2023

walpar
A valmont COMPANY
POST OFFICE BOX 28650
BIRMINGHAM ALABAMA 35228
4200 JEFFERSON AVENUE
BIRMINGHAM ALABAMA 35221
PHONE (205)–925–4990
FAX (205) 925–7273

| | |
|---|---|
| STATE: | South Carolina |
| FED PROJ: | Carolina Crossroads Phase 1 & 2 |
| ST PROJ: | P039718 |
| COUNTY: | Lexington & Richland |
| ROUTE: | I–26 & I–126 |
| SUBJECT: | OVERHEAD SIGN SUPPORT |
| | WALPAR WALKWAY DESIGN |
| FOR: | Archer–United Joint Venture |
| DRAWN BY: | DLK DATE: 8/29/23 |
| CHECKED BY: | DLJ DATE: 9/6/23 |
| DWG NO: | C3546–WE1 |

| NO: | REVISIONS | DATE | MADE | CHECKED |
|---|---|---|---|---|
| 0 | CHECK COMPLETE | 9/6/23 | DLK | DLJ |

C3546-51
SOUTH CAROLINA

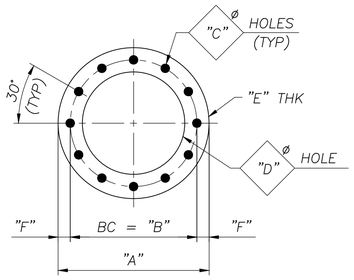


TYPE "FF"
(SEE CHART FOR INFORMATION)

## ANCHOR TEMPLATE CHART

(ALL DIMENSIONS IN INCHES)

| MARK | QTY | TYPE | "A" | "B" | "C" | "D" | "E" | "F" |
|---|---|---|---|---|---|---|---|---|
| 51P1 | 2 | FF | 40 | 36 | 1⅞ | 32 | ¼ | 2 |

**NOTE:**
THREADS (ROLLED OR CUT) FOR "H" NUT

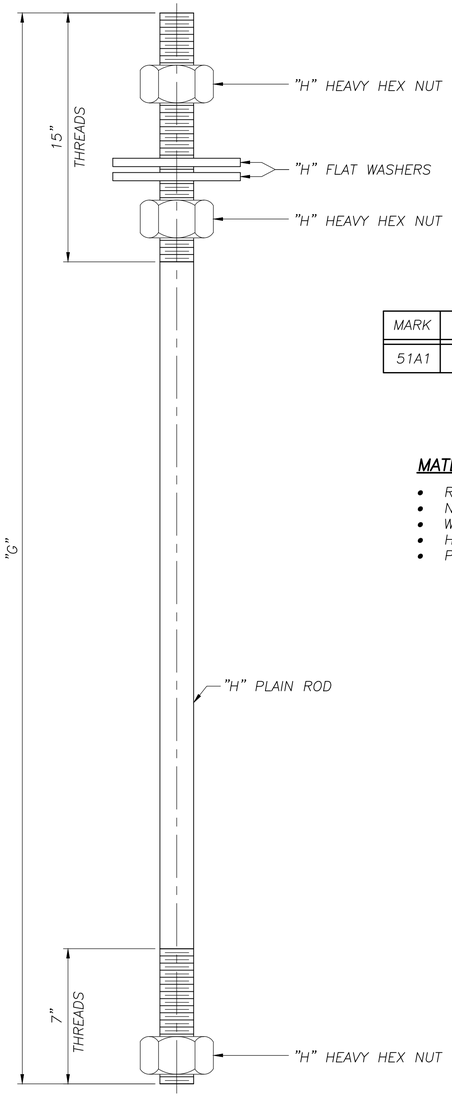


## ~ ANCHOR BOLTS ~

| MARK | "G" | "H"ø | (TPI) | ROD QTY | NUT QTY | FW QTY | |
|---|---|---|---|---|---|---|---|
| 51A1 | 4'-6 | 1¾ | 5 | 12 | 36 | 24 | |

**MATERIAL SPECS:**

- RODS – ASTM F1554, GRADE 55, S1
- NUTS – ASTM A563,GR.DH OR ASTM A194,GR.2H
- WASHERS – ASTM F436
- HARDWARE – GALV PER ASTM-A153
- PLAIN ROD – GALV FULL LENGTH PER ASTM-A153

C3546-51

| PARTS PER CONT | PART MARK NO | NO OF PIECES REQ'D | SECTION SYM | DESCRIPTION OF MATERIAL | LENGTH FEET | LENGTH INCHES | PARTS FOR ONE UNIT |
|---|---|---|---|---|---|---|---|
| | 51P1 | 2 | | ANCHOR TEMPLATES | | | |
| | a | 2 | PL | ¼ x 40 DIA | – | – | |

SHIPPING LIST

| QTY | MARK | DESCRIPTION |
|---|---|---|
| 2 | 51P1 | ANCHOR TEMPLATES |
| 12 | 51A1 | ANCHOR BOLTS |

## NOTE: SHOP SHIP FROM THIS DRAWING

**NOTE:**
DO NOT GALVANIZE TEMPLATES

**NOTE:**
SEE GENERAL NOTES DRAWING FOR MATERIAL SPECIFICATIONS, FOUNDATION AND STANDARD NOTES

OH-19

REF DWG: E8

AASHTO 6th Edition Spec's

SEALED BY:

SOUTH CAROLINA LICENSED PROFESSIONAL ENGINEER No. 38665 DAVID A LALLONE
Oct 25 2023

walpar
A valmont COMPANY

POST OFFICE BOX 28650
BIRMINGHAM ALABAMA 35228
4200 JEFFERSON AVENUE
BIRMINGHAM ALABAMA 35221
PHONE (205)-925-4990
FAX (205) 925-7273

STATE: South Carolina
FED PROJ: Carolina Crossroads Phase 1 & 2
ST PROJ: P039718
COUNTY: Lexington & Richland
ROUTE: I-26 & I-126

SUBJECT: SIGN STRUCTURE
ANCHOR TEMPLATE & SOLE PLATE DETAILS
FOR: Archer-United Joint Venture

DRAWN BY: DLK DATE: 9/28/23
CHECKED BY: DLJ DATE: 10/16/23
DWG NO: C3546-51

| NO: | REVISIONS | DATE | MADE | CHECKED |
|---|---|---|---|---|
| 0 | CHECK COMPLETE | 10/16/23 | DLK | DLJ |

ABAT_TEMP

NAME: E:\acad\JobsNPrg\3546\3546-51.dwg DATE: OCT 16, 2023 TIME: 4:35 AM dj706290

C3546–52
SOUTH CAROLINA

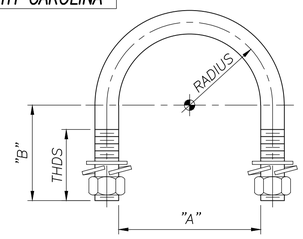


**NOTE 1:**
- UBOLT MATERIAL PROPERTIES TO MEET OR EXCEED A307
- GALV PER A153

**NOTE 2:**
- UBOLT MATERIAL PROPERTIES TO MEET OR EXCEED A307
- ZINC PL PER B633

## ~ U–BOLTS w/(2ea) HN/LW/FW ~

NUTS: ASTM A563,GR.DH OR ASTM A194,GR.2H
WASHERS: ASTM F436 & ANSI–B18.21.1

| MARK | QTY | DIA | "A" | "B" | RADIUS | THDS | MATERIAL |
|---|---|---|---|---|---|---|---|
| U1 | 16 | 5/16 | 1 11/16 | 1 5/8 | 1 | 1 1/4 | NOTE 2 |
| U4 | 32 | 1/2 | 4 5/8 | 4 1/4 | 2 9/16 | 2 | NOTE 1 |

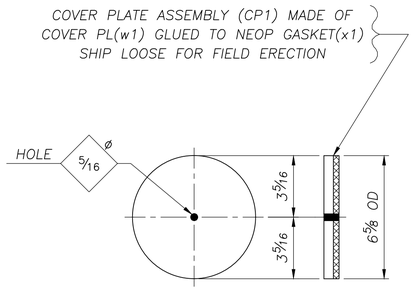


## 1 ~ COVER PLATE ASSEMBLY ~ CP1

| PART MARK NO | NO OF PIECES REQ'D | SECTION SYM | DESCRIPTION OF MATERIAL | LENGTH FEET | LENGTH INCHES | PARTS FOR ONE UNIT |
|---|---|---|---|---|---|---|
| CP1 | 1 | | COVER PLATE ASSEMBLY | | | |
| w1 | 1 | PL | 1/4 x 6 5/8 DIA. (GALV A123) | – | – | 1 |
| x1 | 1 | OP | 1/8 x 6 5/8 DIA. (NEOP GASKET) | – | – | 1 |

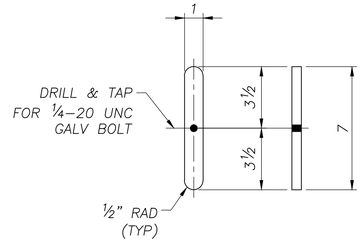


## 1 ~ HANDHOLE BAR ~ HB1

| PART MARK NO | NO OF PIECES REQ'D | SECTION SYM | DESCRIPTION OF MATERIAL | LENGTH FEET | LENGTH INCHES | PARTS FOR ONE UNIT |
|---|---|---|---|---|---|---|
| HB1 | 1 | | HANDHOLE BAR | | | |
| w2 | 1 | PL | 1/4 x 1 (GALV A123) | 0 | 7 | 1 |

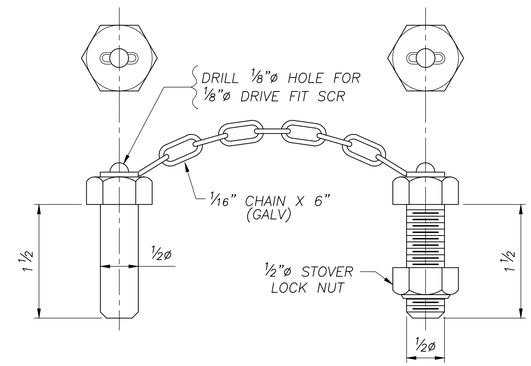


## 8 ~ HINGE PIN ASSEMBLY ~ 52P1

MAT'L SPECS: ASTM A307 (ZINC PL UN)

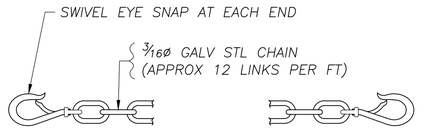


## ~ SAFETY CHAIN ~

| MARK | QTY | LENGTH |
|---|---|---|
| 52S1 | 2 | 4'–6 |

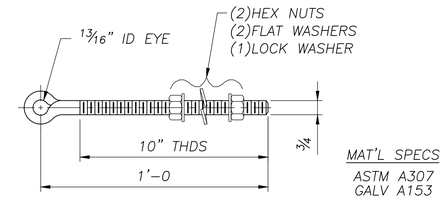


MAT'L SPECS
ASTM A307
GALV A153

## 6 ~ EYE BOLT ASSEMBLY ~ 52M1

NUTS: ASTM A563,GR.DH OR ASTM A194,GR.2H
WASHERS: ASTM F436 & ANSI–B18.21.1

**NOTE:**
SEE GENERAL NOTES DRAWING FOR MATERIAL SPECIFICATIONS, FOUNDATION AND STANDARD NOTES

REF DWGS: E8

OH–19

AASHTO 6th Edition Spec's

SEALED BY:

SOUTH CAROLINA PROFESSIONAL ENGINEER
No. 38665
DAVID A LALLONE
Oct 25 2023

walpar
A valmont COMPANY
POST OFFICE BOX 28650
BIRMINGHAM ALABAMA 35228
4200 JEFFERSON AVENUE
BIRMINGHAM ALABAMA 35221
PHONE (205)–925–4990
FAX (205) 925–7273

| NO: | REVISIONS | DATE | MADE | CHECKED |
|---|---|---|---|---|
| 0 | CHECK COMPLETE | 10/16/23 | DLK | DLJ |

STATE: South Carolina
FED PROJ: Carolina Crossroads Phase 1 & 2
ST PROJ: P039718
COUNTY: Lexington & Richland
ROUTE: I–26 & I–126

SUBJECT: SIGN STRUCTURES
MISC DETAILS
FOR: Archer–United Joint Venture

DRAWN BY: DLK DATE: 9/28/23
CHECKED BY: DLJ DATE: 10/16/23
DWG NO: C3546–52

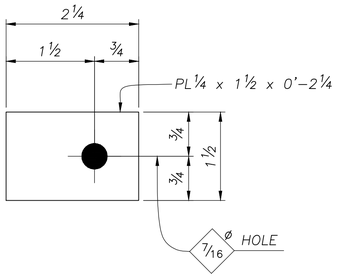


## 16 ~ CLAMP PLATES ~ 53M1

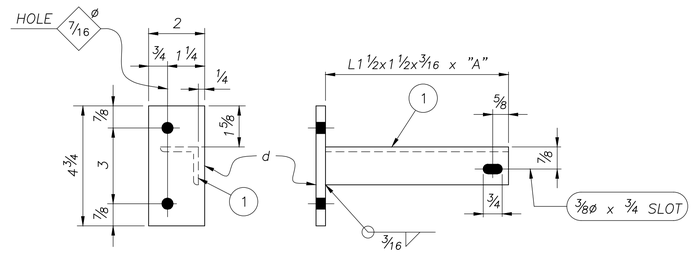


## ~ SAFETY CHAIN SUPPORT ~

(SEE CHART)

| MARK | QTY | "A" | (1) |
|---|---|---|---|
| 53M3 | 2 | 3'-0 | f |

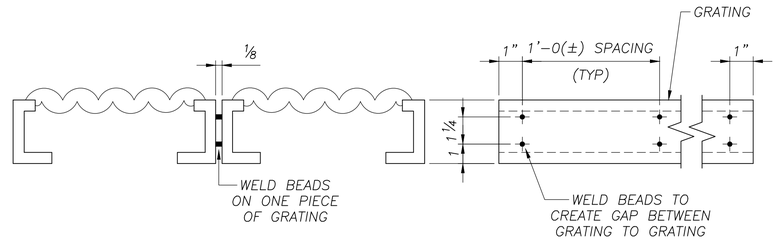


## GRATING GAP DETAIL

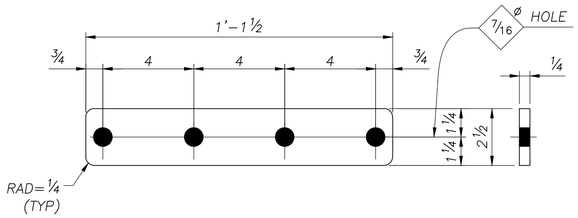


## 4 ~ SPLICE PLATES ~ 53M2

(FOR GRATING)

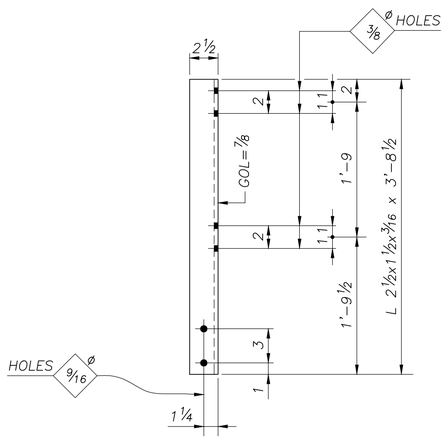


## 8 ~ HANDRAIL POSTS ~ 53P1

(ALUMINUM)

### SHOP NOTE:

GRATING TO BE "GRIP STRUT", OR EQUAL SAFETY GRATING 3" DEEP, FORMED FROM 12 GA SHEETS GALV AFTER FAB WELDED TOGETHER IN A COMBINATION OF THESE SIZES
(1) #8 DIAMOND 18 3/4" WIDE – CAT# 83012 AND
(1) #5 DIAMOND 11 3/4" WIDE – CAT# 53012

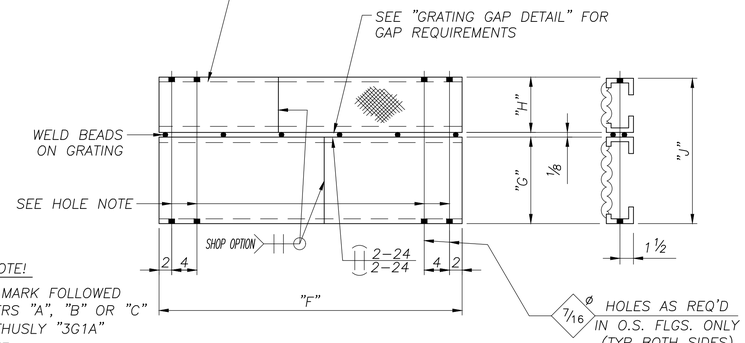


HOLE NOTE!

GRATING MARK FOLLOWED BY LETTERS "A", "B" OR "C" SHOWN THUSLY "3G1A" DESIGNATE:
"A" – NO HOLES
"B" – HOLES 1–END
"C" – HOLES BOTH ENDS

## ~ GRATING ~

(SEE CHART)

| MARK | QTY | "F" | "G" | "H" | "J" |
|---|---|---|---|---|---|
| 53G1B | 2 | 14'-2 | 1'-6 3/4 | 11 3/4 | 2'-6 5/8 |
| 53G2C | 1 | 14'-2 | 1'-6 3/4 | 11 3/4 | 2'-6 5/8 |

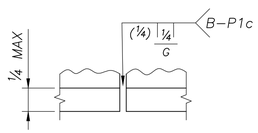


## TOE ANGLE SPLICE

( OPTIONAL )

### NOTE:

SEE GENERAL NOTES DRAWING FOR MATERIAL SPECIFICATIONS, FOUNDATION AND STANDARD NOTES

REF DWG: E8

OH-19

AASHTO 6th Edition Spec's

C3546-53

| PARTS PER CONT | PART MARK NO | NO OF PIECES REQ'D | SECTION SYM | DESCRIPTION OF MATERIAL | LENGTH FEET | LENGTH INCHES | PARTS FOR ONE UNIT | |
|---|---|---|---|---|---|---|---|---|
| | 53M1 | 16 | | CLAMP PLATES | | | | |
| | a | 16 | PL | 1/4 x 1 1/2 | 0 | 2 1/4 | | |
| | 53M2 | 4 | | SPLICE PLATES | | | | |
| | b | 4 | PL | 1/4 x 2 1/2 | 1 | 1 1/2 | | |
| | 53M3 | 2 | | SAFETY CHAIN SUPPORT | | | | |
| | d | 2 | PL | 1/4 x 2 | 0 | 4 3/4 | | |
| | f | 2 | L | 1 1/2 x 1 1/2 x 3/16 | 3 | 0 | | |
| | 53G1B | 2 | | GRATING | | | | |
| | g | 2 | GRT | 18 3/4 WIDE | 14 | 2 | | |
| | n | 2 | GRT | 11 3/4 WIDE | 14 | 2 | | |
| | 53G2C | 1 | | GRATING | | | | |
| | g | 1 | GRT | 18 3/4 WIDE | 14 | 2 | | |
| | n | 1 | GRT | 11 3/4 WIDE | 14 | 2 | | |
| | 53P1 | 8 | | HANDRAIL POSTS | | | | |
| | h | 8 | ALL | 2 1/2 x 1 1/2 x 3/16 (ALUM 6061) | 3 | 8 1/2 | | |
| | 53R1 | 8 | | HANDRAIL | | | | |
| | k | 8 | ALPI | 1.660 x .140 (ALUM 6061) | 10 | 7 1/2 | | |
| | 53A1 | 2 | | SAFETY ANGLE | | | | |
| | m | 2 | L | 4 x 3 x 1/4 | 21 | 3 | | |
| | 53L1 | 2 | | LIGHTING SUPPORTS (ALUM 6063-T6) | | | | |
| | p | 2 | ALUN | UNISTRUT 1 5/8 x 1 5/8 x .105 | 20 | 0 | | |
| | 53L2 | 2 | | LIGHTING SUPPORTS (ALUM 6063-T6) | | | | |
| | ap | 2 | ALUN | UNISTRUT 1 5/8 x 1 5/8 x .105 | 21 | 6 | | |

SEALED BY:

SOUTH CAROLINA PROFESSIONAL ENGINEER
No. 38665
DAVID A LALLONE

Oct 25 2023

| NO: | REVISIONS | DATE | MADE | CHECKED |
|---|---|---|---|---|
| 0 | CHECK COMPLETE | 10/16/23 | DLK | DLJ |


walpar
A valmont COMPANY
POST OFFICE BOX 28650
BIRMINGHAM ALABAMA 35228
4200 JEFFERSON AVENUE
BIRMINGHAM ALABAMA 35221
PHONE (205)-925-4990
FAX (205) 925-7273


| | |
|---|---|
| STATE: | South Carolina |
| FED PROJ: | Carolina Crossroads Phase 1 & 2 |
| ST PROJ: | P039718 |
| COUNTY: | Lexington & Richland |
| ROUTE: | I-26 & I-126 |
| SUBJECT: | SIGN STRUCTURE<br>MISC DETAILS |
| FOR: | Archer-United Joint Venture |
| DRAWN BY: | DLK DATE: 10/2/23 |
| CHECKED BY: | DLJ DATE: 10/16/23 |
| DWG NO: | C3546-53 |

| MARK | QTY | "A" | "B" | "C" | "D" | "E" | "F" | "G" | "H" |
|---|---|---|---|---|---|---|---|---|---|
| 54C1 | 1 | 21'–11¾ | 17'–11¾ | 4'–0 | 3'–0 | 1'–3 | 4 @ 3¾ = 1'–3 | 1'–4¾ | 5 @ 3 = 1'–3 |

| MARK | "J" | "K" | "L" | "M" | "N" QTY | "N" DIA | "P" | "S" | "T" | 1 | 2 | 3 | 4 | 5 | 6 | 7 | 8 |
|---|---|---|---|---|---|---|---|---|---|---|---|---|---|---|---|---|---|
| 54C1 | 2½ | 2½ | 7⅛ | 5/16 | 12 | 2 | 2½ | 2'–6 1/16 | ¼ | a | b | d | f | k | k | n | h |

| PARTS PER CONT | PART MARK NO | NO. OF PIECES REQ'D | SECTION SYM | DESCRIPTION OF MATERIAL | LENGTH FEET | LENGTH INCHES | PARTS FOR ONE UNIT |
|---|---|---|---|---|---|---|---|
| | 54C1 | 1 | | CANTILEVER POST | | | |
| | a | 1 | PIPE | 30.000 x .500 | 21 | 10 15/16 | |
| | b | 1 | PL | 1¾ x 41 DIA. | – | – | |
| | d | 1 | PL | ½ x 36 | 3 | 0 | |
| | f | 1 | PL | ½ x 36 | 3 | 0 | |
| | k | 8 | PL | ½ x 2½ | 0 | 2½ | |
| | n | 8 | PL | ½ x 7⅛ | 0 | 7⅛ | |
| | h | 12 | PL | ½ x 5 | 1 | 0 | |
| | v1 | 1 | PIPE | 6.625 x .864 | 0 | 3 | |
| | z1 | 3 | OP | 1¼" FORGED HALF CPLG (3000#) | – | – | |

C3546–54

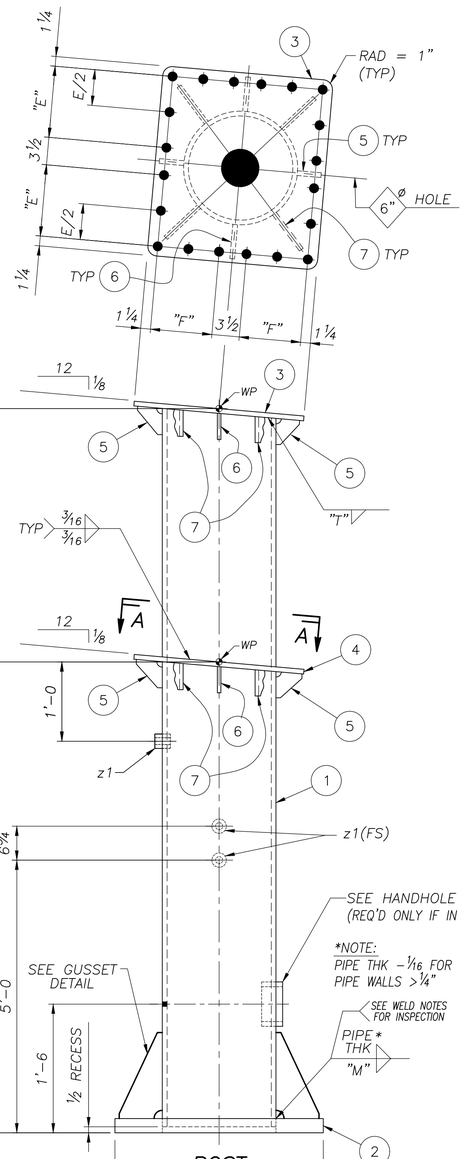


POST

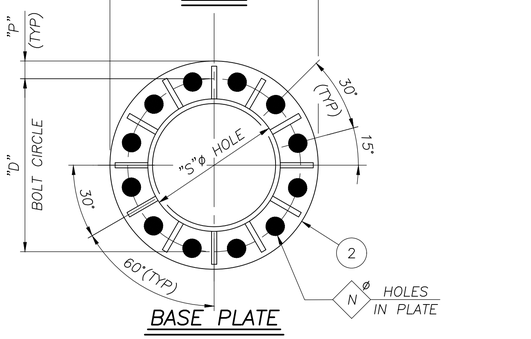


BASE PLATE

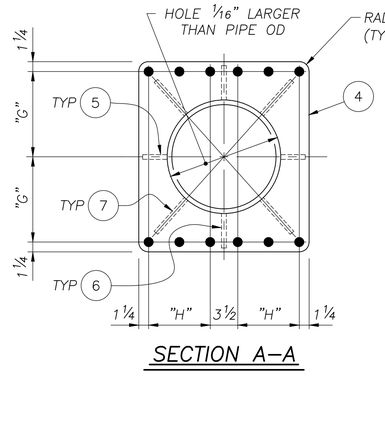


SECTION A–A

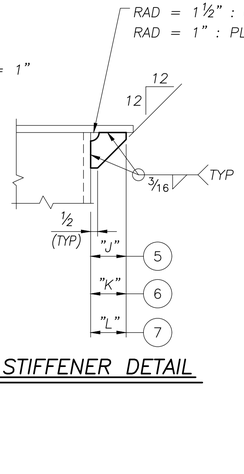


STIFFENER DETAIL

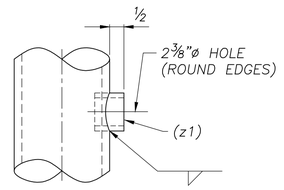


WIRE OUTLET DETAIL

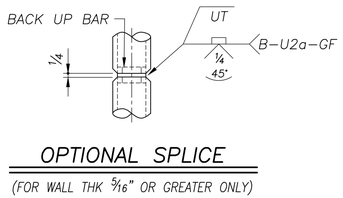


OPTIONAL SPLICE

(FOR WALL THK 5/16" OR GREATER ONLY)

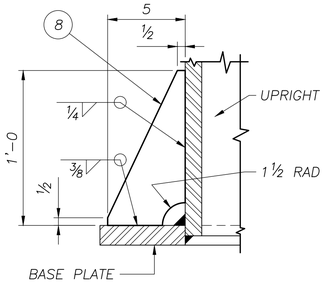


TYP GUSSET DETAIL

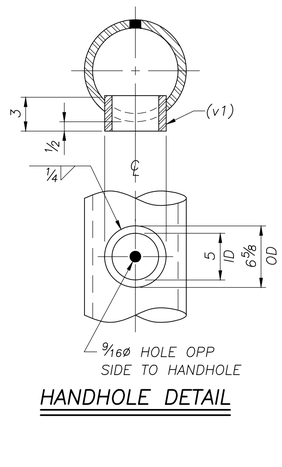


HANDHOLE DETAIL

**NOTE:**
ALL HOLES TO BE ⌀ 7/8 UNLESS NOTED

**NOTE:**
SEE GENERAL NOTES DRAWING FOR MATERIAL SPECIFICATIONS, FOUNDATION AND STANDARD NOTES

REF DWG: E8

OH–19

AASHTO 6th Edition Spec's

SEALED BY:

SOUTH CAROLINA PROFESSIONAL ENGINEER
No. 38665
DAVID A LALLOUE

Oct 25 2023

| NO: | REVISIONS | DATE | MADE | CHECKED |
|---|---|---|---|---|
| 0 | CHECK COMPLETE | 10/16/23 | DLK | DLJ |

walpar
A valmont COMPANY


POST OFFICE BOX 28650
BIRMINGHAM ALABAMA 35228
4200 JEFFERSON AVENUE
BIRMINGHAM ALABAMA 35221
PHONE (205)–925–4990
FAX (205) 925–7273


0

CBTUPDET

| | |
|---|---|
| STATE: | South Carolina |
| FED PROJ: | Carolina Crossroads Phase 1 & 2 |
| ST PROJ: | P039718 |
| COUNTY: | Lexington & Richland |
| ROUTE: | I–26 & I–126 |

SUBJECT: CANTILEVER SIGN SUPPORT
DETAILS OF UPRIGHT

FOR: Archer–United Joint Venture

DRAWN BY: DLK DATE: 9/28/23
CHECKED BY: DLJ DATE: 10/16/23

DWG NO: C3546–54


NAME: E:\acad\JobsNPrg\3546\3546–54.dwg DATE: OCT 16, 2023 TIME: 4:35 AM dj706290

| MARK | QTY | "A" | "C" | PANELS | "D" | "E" | "F" | "G" | "H" | "J" | "K" | "L" | "M" | "N" | "P" | "W" | "X" | "Y" | "Z" |
|---|---|---|---|---|---|---|---|---|---|---|---|---|---|---|---|---|---|---|---|
| 55T1 | 1 | 38'-4 | 4'-0 | 8 @ 4'-3 5/16(±) = 34'-2 1/2 | 3'-6 | 1'-3 | 4 @ 3 3/4 = 1'-3 | 2'-9 1/2 | 5 @ 3 = 1'-3 | 17'-10 5/16 | 3'-4 1/2 | 4 1/4 | 2 1/2 | 2 1/2 | 4 1/2 | 1/4 | 7/8 | 7 1/2 | 6 |

| MARK | "R" | "S" | "T" | "V" | 1 | 2 | 3 | 4 | 5 | 6 | 7 | 8 | 9 | 10 | 11 |
|---|---|---|---|---|---|---|---|---|---|---|---|---|---|---|---|
| 55T1 | 3'-10 1/2 | 16'-2 1/2 | ------- | ------- | a | b | d | f | g | h | k | m | n | p | z1 |

| VENT HOLE SIZES | |
|---|---|
| WEB MEMBER (OD) | HOLE DIA ± 1/4" |
| < 3.500 | 3/4 |
| 3.500 | 1 3/4 |
| 4.000 | 2 |
| 4.500 | 2 1/4 |
| 5.563 | 2 3/4 |
| 6.625 | 3 1/4 |

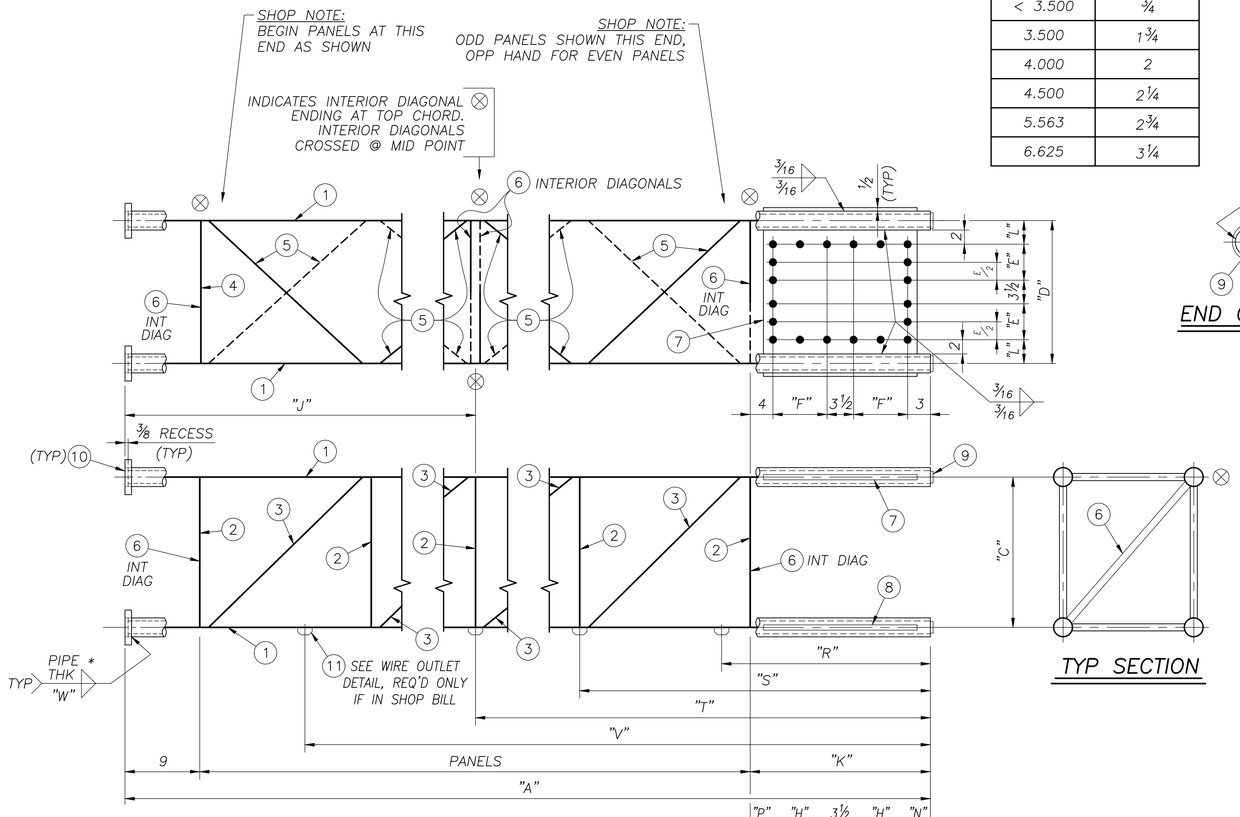


TRUSS

*NOTE: PIPE THK −1/16" FOR PIPE WALLS > 1/4"

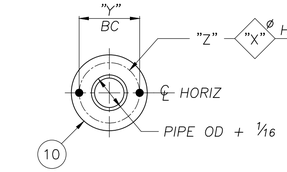


FLANGE DETAIL

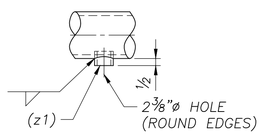


WIRE OUTLET DETAIL

SHOP NOTE: INTERIOR DIAGONALS MAY BE OFFSET UP TO 6" FROM PANEL POINTS ON TRUSS IN ORDER TO AVOID INTERSECTING WELDS IN THE AREA OF OTHER WEB MEMBERS.
DO NOT OFFSET MEMBERS SO AS TO INTERFERE WITH BOLTED CONNECTIONS AT FIELD SPLICES.

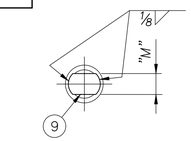


END CAP DETAIL

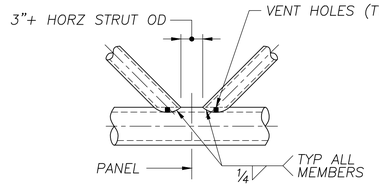


JOINT DETAIL

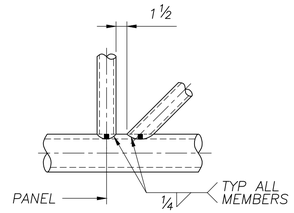


JOINT DETAIL

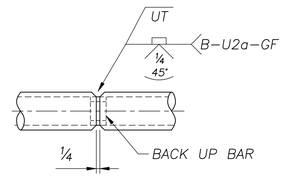


OPTIONAL CHORD SPLICE
(FOR WALL THK 5/16" OR GREATER ONLY)

NOTE:
ALL HOLES TO BE Ø 7/8 UNLESS NOTED

NOTE:
SEE GENERAL NOTES DRAWING FOR MATERIAL SPECIFICATIONS, FOUNDATION AND STANDARD NOTES

REF DWG: E8

AASHTO 6th Edition Spec's

| | | | | | |
|---|---|---|---|---|---|
| | | | | | C3546-55 |
| PARTS PER CONT | PART MARK NO | NO OF PIECES REQ'D | SECTION SYM | DESCRIPTION OF MATERIAL | LENGTH FEET | LENGTH INCHES | PARTS FOR ONE UNIT |
| | 55T1 | 1 | | CANTILEVER TRUSS | | | |
| | a | 4 | PIPE | 4.500 x .237 | 38 | 3 5/8 | |
| | b | 18 | PIPE | 1.900 x .145 | 3 | 7 3/16 | |
| | d | 16 | PIPE | 1.900 x .145 | 5 | 3 5/8 | |
| | f | 3 | PIPE | 1.900 x .200 | 3 | 1 3/4 | |
| | g | 16 | PIPE | 1.900 x .200 | 4 | 11 1/16 | |
| | h | 4 | PIPE | 1.900 x .145 | 4 | 11 9/16 | |
| | k | 1 | PL | 1/2 x 36 | 3 | 11 1/2 | |
| | m | 2 | PL | 1/2 x 8 1/4 | 3 | 0 | |
| | n | 4 | PL | 1/4 x 2 1/2 | 0 | 4 1/4 | |
| | p | 4 | PL | 3/4 x 10 1/2 DIA. | – | – | |
| | z1 | 2 | OP | 1 1/4" FORGED HALF CPLG (3000#) | – | – | |

SEALED BY:

SOUTH CAROLINA PROFESSIONAL ENGINEER
No. 38665
DAVID A LALLONE
Oct 25 2023

| NO: | REVISIONS | DATE | MADE | CHECKED |
|---|---|---|---|---|
| 0 | CHECK COMPLETE | 10/16/23 | DLK | DLJ |


walpar
A valmont COMPANY
POST OFFICE BOX 28650
BIRMINGHAM ALABAMA 35228
4200 JEFFERSON AVENUE
BIRMINGHAM ALABAMA 35221
PHONE (205)-925-4990
FAX (205) 925-7273


0

| | |
|---|---|
| STATE: | South Carolina |
| FED PROJ: | Carolina Crossroads Phase 1 & 2 |
| ST PROJ: | P039718 |
| COUNTY: | Lexington & Richland |
| ROUTE: | I-26 & I-126 |
| SUBJECT: | CANTILEVER SIGN SUPPORT<br>DETAIL OF TRUSS |
| FOR: | Archer-United Joint Venture |
| DRAWN BY: | DLK DATE: 9/28/23 |
| CHECKED BY: | DLJ DATE: 10/16/23 |
| DWG NO: | C3546-55 |

OH-19

CBTSDET

| MARK | QTY | "B" | "C" | PANELS | "D" | | | | | | | | "M" | | | "W" | "X" | "Y" | "Z" |
|---|---|---|---|---|---|---|---|---|---|---|---|---|---|---|---|---|---|---|---|
| 56T1 | 1 | 10'–0¾ | 4'–0 | 2 @ 4'–3⅜(±) = 8'–6¾ | 3'–6 | | | | | | | | 2½ | | | ¼ | ⅞ | 7½ | 6 |

| MARK | | "S" | "T" | "V" | 1 | 2 | 3 | 4 | 5 | 6 | | | 9 | 10 | 11 |
|---|---|---|---|---|---|---|---|---|---|---|---|---|---|---|---|
| 56T1 | | 9 | ------- | ------- | a | b | d | f | g | h | | | n | p | z1 |

| C3546–56 | | | | | | | | |
|---|---|---|---|---|---|---|---|---|
| PARTS PER CONT | PART MARK NO | NO OF PIECES REQ'D | SECTION SYM | DESCRIPTION OF MATERIAL | LENGTH FEET | LENGTH INCHES | PARTS FOR ONE UNIT | |
| | 56T1 | 1 | | CANTILEVER TRUSS | | | | |
| | a | 4 | PIPE | 4.500 x .237 | 10 | 0⅜ | | |
| | b | 6 | PIPE | 1.900 x .145 | 3 | 7 3/16 | | |
| | d | 4 | PIPE | 1.900 x .145 | 5 | 3⅜ | | |
| | f | 4 | PIPE | 1.900 x .200 | 3 | 1¾ | | |
| | g | 4 | PIPE | 1.900 x .200 | 4 | 11 1/16 | | |
| | h | 2 | PIPE | 1.900 x .145 | 4 | 11 9/16 | | |
| | n | 4 | PL | ¼ x 2½ | 0 | 4¼ | | |
| | p | 4 | PL | ¾ x 10½ DIA. | – | – | | |
| | z1 | 1 | OP | 1¼" FORGED HALF CPLG (3000#) | – | – | | |

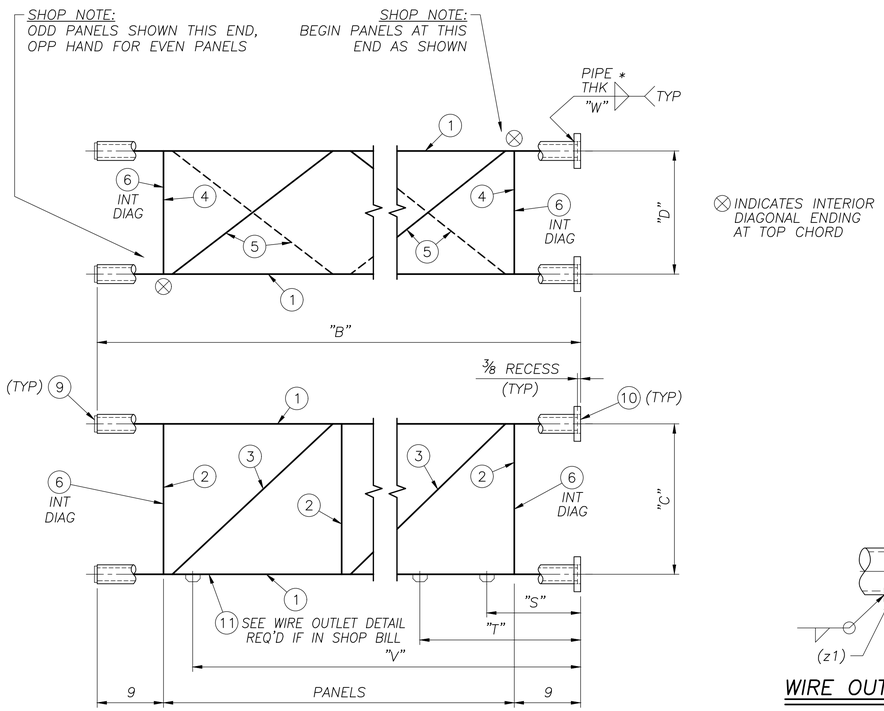


TRUSS

⊗ INDICATES INTERIOR DIAGONAL ENDING AT TOP CHORD

*NOTE: PIPE THK – 1/16" FOR PIPE WALLS > ¼"

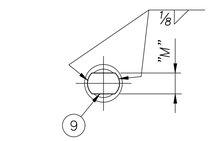


END CAP DETAIL

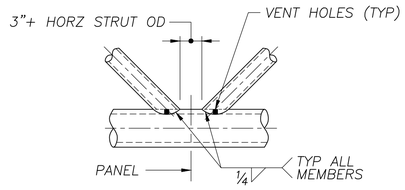


JOINT DETAIL

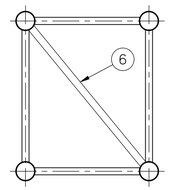


TYP SECTION

| VENT HOLE SIZES | |
|---|---|
| WEB MEMBER OD | HOLE DIA ± ¼" |
| < 3.500 | ¾ |
| 3.500 | 1¾ |
| 4.000 | 2 |
| 4.500 | 2¼ |
| 5.563 | 2¾ |
| 6.625 | 3¼ |

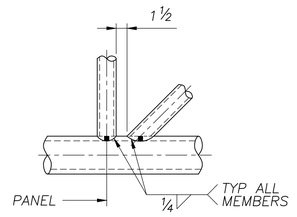


JOINT DETAIL

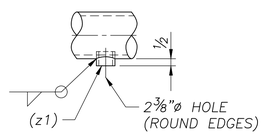


WIRE OUTLET DETAIL

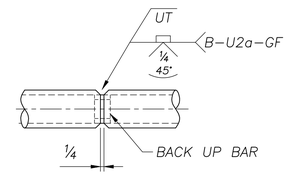


OPTIONAL CHORD SPLICE

(FOR WALL THK 5/16" OR GREATER ONLY)

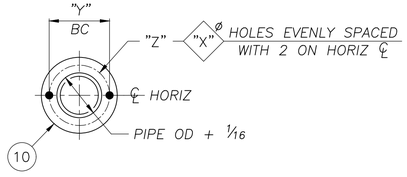


FLANGE DETAIL

SHOP NOTE:

INTERIOR DIAGONALS MAY BE OFFSET UP TO 6" FROM PANEL POINTS ON TRUSS IN ORDER TO AVOID INTERSECTING WELDS IN THE AREA OF OTHER WEB MEMBERS.

DO NOT OFFSET MEMBERS SO AS TO INTERFERE WITH BOLTED CONNECTIONS AT FIELD SPLICES.

NOTE:

SEE GENERAL NOTES DRAWING FOR MATERIAL SPECIFICATIONS, FOUNDATION AND STANDARD NOTES

REF DWG: E8

OH–19

AASHTO 6th Edition Spec's

SEALED BY:

SOUTH CAROLINA PROFESSIONAL ENGINEER No. 38665 DAVID A LALLONE

Oct 25 2023


walpar A valmont COMPANY

POST OFFICE BOX 28650
BIRMINGHAM ALABAMA 35228
4200 JEFFERSON AVENUE
BIRMINGHAM ALABAMA 35221
PHONE (205)–925–4990
FAX (205) 925–7273


| NO: | REVISIONS | DATE | MADE | CHECKED |
|---|---|---|---|---|
| 0 | CHECK COMPLETE | 10/16/23 | DLK | DLJ |

STATE: South Carolina
FED PROJ: Carolina Crossroads Phase 1 & 2
ST PROJ: P039718
COUNTY: Lexington & Richland
ROUTE: I–26 & I–126

SUBJECT: CANTILEVER SIGN SUPPORT
DETAIL OF TRUSS
FOR: Archer–United Joint Venture

DRAWN BY: DLK DATE: 9/28/23
CHECKED BY: DLJ DATE: 10/16/23
DWG NO: C3546–56

C3546-57

| PARTS PER CONT | PART MARK NO | NO OF PIECES REQ'D | SECTION SYM | DESCRIPTION OF MATERIAL | LENGTH FEET | LENGTH INCHES | PARTS FOR ONE UNIT |
|---|---|---|---|---|---|---|---|
| | 57S1 | 2 | | SIGN/WALK/LIGHT SUPPORTS | | | |
| | a | 2 | W | 6 x 9 | 8 | 8 | |
| | ab | 2 | W | 6 x 9 | 6 | 0 | |
| | d | 2 | PL | 1/4 x 6 | 0 | 6 | |
| | f | 2 | PL | 3/8 x 2 1/2 | 0 | 4¼ | |
| | h | 2 | PL | 1/2 x 2 1/2 | 0 | 7¾ | |
| | 57S2 | 4 | | SIGN/WALK/LIGHT SUPPORTS | | | |
| | aa | 4 | W | 6 x 9 | 8 | 8 | |
| | ab | 4 | W | 6 x 9 | 6 | 0 | |
| | d | 4 | PL | 1/4 x 6 | 0 | 6 | |
| | f | 4 | PL | 3/8 x 2 1/2 | 0 | 4¼ | |
| | h | 4 | PL | 1/2 x 2 1/2 | 0 | 7¾ | |
| | 57S3 | 2 | | WALK SUPPORTS | | | |
| | ba | 2 | W | 6 x 9 | 8 | 8 | |
| | b | 2 | W | 6 x 9 | 4 | 7 | |
| | d | 2 | PL | 1/4 x 6 | 0 | 6 | |
| | h | 2 | PL | 1/2 x 2 1/2 | 0 | 7¾ | |
| | | | | | | | |
| | 57H1 | 6 | | SIGN HANGERS | | | |
| | k | 6 | L | 5 x 3 x 5/16 | 8 | 0¼ | |

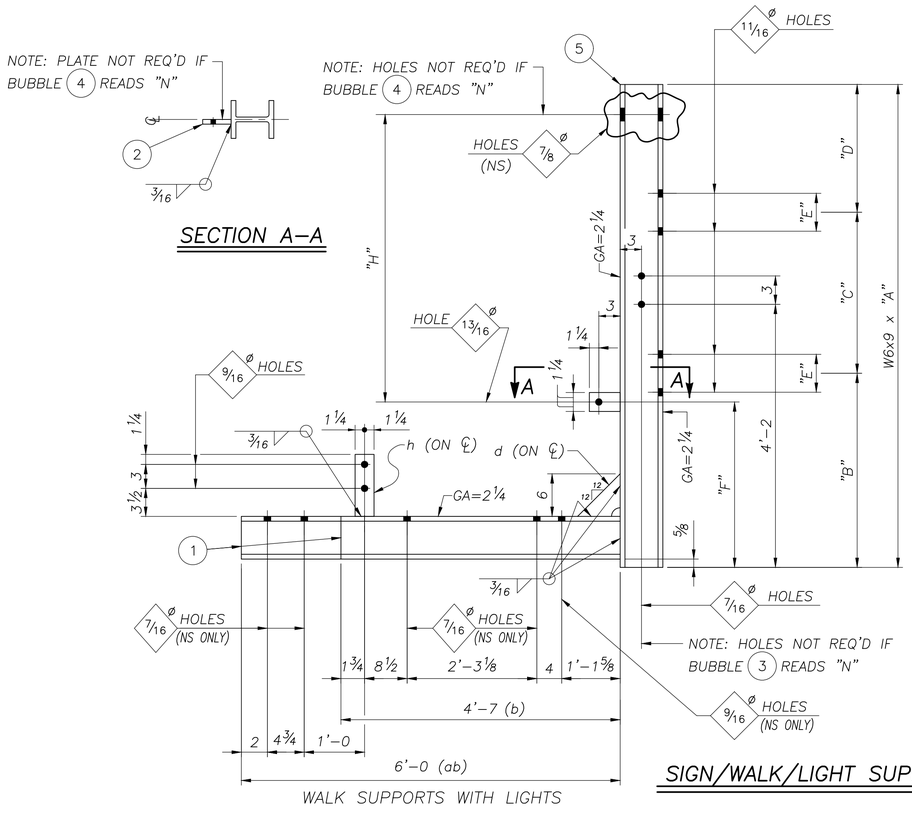


SIGN/WALK/LIGHT SUPPORTS

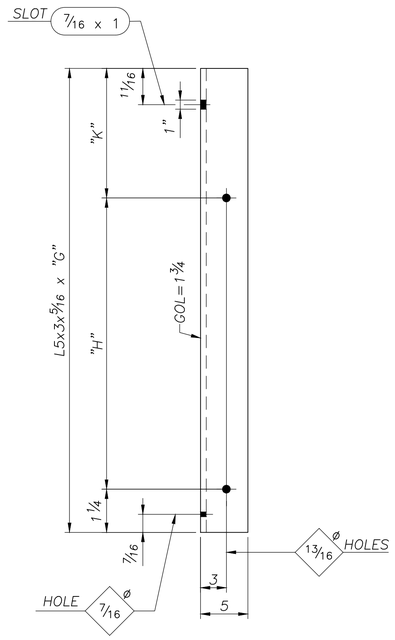


SIGN HANGERS

| MARK | QTY | "A" | "B" | "C" | "D" | "E" | "F" | "H" | 1 | 2 | 3 | 4 | 5 |
|---|---|---|---|---|---|---|---|---|---|---|---|---|---|
| 57S1 | 2 | 8'-8 | 4'-2 | 4'-0 | 6 | 5⅛ | 2'-3¼ | 5'-4 | ab | f | Y | Y | a |
| 57S2 | 4 | 8'-8 | 4'-2 | 4'-0 | 6 | 5⅛ | 2'-3¼ | 5'-4 | ab | f | N | Y | aa |
| 57S3 | 2 | 8'-8 | 4'-2 | 4'-0 | 6 | 5⅛ | ---- | ---- | b | – | N | N | ba |

| MARK | QTY | "G" | "H" | "K" |
|---|---|---|---|---|
| 57H1 | 6 | 8'-0¼ | 5'-4 | 2'-7 |

NOTE:
SEE GENERAL NOTES DRAWING FOR MATERIAL SPECIFICATIONS, FOUNDATION AND STANDARD NOTES

REF DWG: E8

OH-19

AASHTO 6th Edition Spec's

SEALED BY:

SOUTH CAROLINA LICENSED PROFESSIONAL ENGINEER No. 38665 DAVID A LALLONE

Oct 25 2023

walpar
A valmont COMPANY

POST OFFICE BOX 28650
BIRMINGHAM ALABAMA 35228
4200 JEFFERSON AVENUE
BIRMINGHAM ALABAMA 35221
PHONE (205)-925-4990
FAX (205) 925-7273

STATE: South Carolina
FED PROJ: Carolina Crossroads Phase 1 & 2
ST PROJ: P039718
COUNTY: Lexington & Richland
ROUTE: I-26 & I-126

SUBJECT: SIGN SUPPORT
WALK SUPPORT & SIGN HANGER DETAILS
FOR: Archer-United Joint Venture

DRAWN BY: DLK DATE: 9/28/23
CHECKED BY: DLJ DATE: 10/16/23
DWG NO: C3546-57

| NO: | REVISIONS | DATE | MADE | CHECKED |
|---|---|---|---|---|
| 0 | CHECK COMPLETE | 10/16/23 | DLK | DLJ |

SH-DET4

NAME: E:\acad\JobsNPrg\3546\3546-57.dwg DATE: OCT 16, 2023 TIME: 4:34 AM dj706290

C3546–58
SOUTH CAROLINA

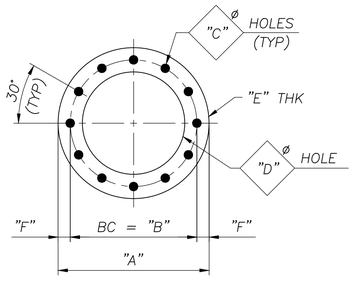


TYPE "FF"
(SEE CHART FOR INFORMATION)

## ANCHOR TEMPLATE CHART (ALL DIMENSIONS IN INCHES)

| MARK | QTY | TYPE | "A" | "B" | "C" | "D" | "E" | "F" |
|---|---|---|---|---|---|---|---|---|
| 58P1 | 2 | FF | 40 | 36 | 1 7/8 | 32 | 1/4 | 2 |

**NOTE:**
THREADS (ROLLED OR CUT) FOR "H" NUT

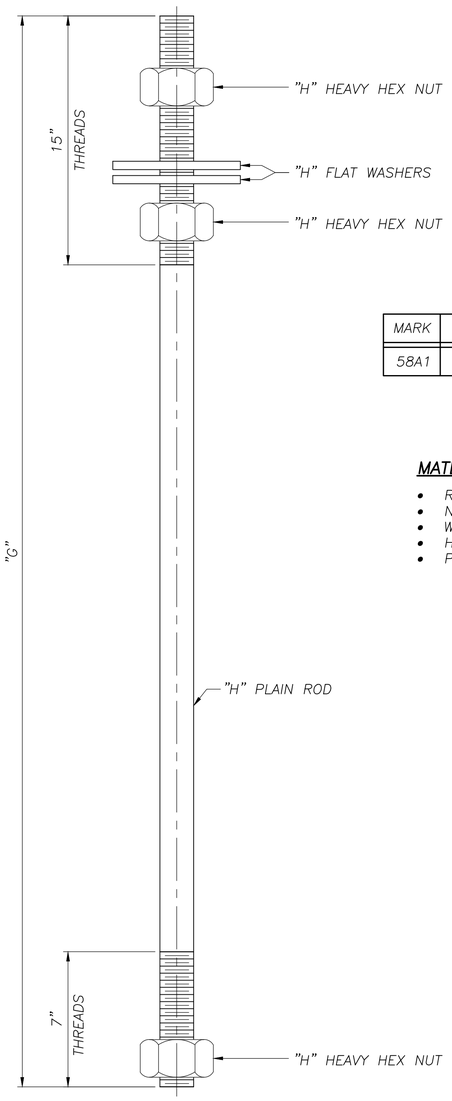


## ~ ANCHOR BOLTS ~

| MARK | "G" | "H"ø | (TPI) | ROD QTY | NUT QTY | FW QTY | |
|---|---|---|---|---|---|---|---|
| 58A1 | 4'–6 | 1 3/4 | 5 | 12 | 36 | 24 | |

**MATERIAL SPECS:**

- RODS – ASTM F1554, GRADE 55, S1
- NUTS – ASTM A563,GR.DH OR ASTM A194,GR.2H
- WASHERS – ASTM F436
- HARDWARE – GALV PER ASTM–A153
- PLAIN ROD – GALV FULL LENGTH PER ASTM–A153

C3546–58

| PARTS PER CONT | PART MARK NO | NO OF PIECES REQ'D | SECTION SYM | DESCRIPTION OF MATERIAL | LENGTH FEET | LENGTH INCHES | PARTS FOR ONE UNIT |
|---|---|---|---|---|---|---|---|
| | 58P1 | 2 | | ANCHOR TEMPLATES | | | |
| | a | 2 | PL | 1/4 x 40 DIA | – | – | |

| SHIPPING LIST | | |
|---|---|---|
| QTY | MARK | DESCRIPTION |
| 2 | 58P1 | ANCHOR TEMPLATES |
| 12 | 58A1 | ANCHOR BOLTS |

NOTE: SHOP SHIP FROM THIS DRAWING

**NOTE:**
DO NOT GALVANIZE TEMPLATES

**NOTE:**
SEE GENERAL NOTES DRAWING FOR MATERIAL SPECIFICATIONS, FOUNDATION AND STANDARD NOTES

REF DWG: E9

OH–29

AASHTO 6th Edition Spec's

SEALED BY:

SOUTH CAROLINA LICENSED PROFESSIONAL ENGINEER
No. 38665
DAVID A LALLOUE

Oct 25 2023

| NO: | REVISIONS | DATE | MADE | CHECKED |
|---|---|---|---|---|
| 0 | CHECK COMPLETE | 10/16/23 | DLK | DLJ |


walpar
A valmont COMPANY
POST OFFICE BOX 28650
BIRMINGHAM ALABAMA 35228
4200 JEFFERSON AVENUE
BIRMINGHAM ALABAMA 35221
PHONE (205)–925–4990
FAX (205) 925–7273


| | |
|---|---|
| STATE: | South Carolina |
| FED PROJ: | Carolina Crossroads Phase 1 & 2 |
| ST PROJ: | P039718 |
| COUNTY: | Lexington & Richland |
| ROUTE: | I–26 & I–126 |
| SUBJECT: | SIGN STRUCTURE<br>ANCHOR TEMPLATE & SOLE PLATE DETAILS |
| FOR: | Archer–United Joint Venture |
| DRAWN BY: | DLK DATE: 9/28/23 |
| CHECKED BY: | DLJ DATE: 10/16/23 |
| DWG NO: | C3546–58 |

0

ABAT_TEMP


NAME: E:\acad\JobsNProg\3546\3546–58.dwg DATE: OCT 16, 2023 TIME: 4:34 AM djl706290

C3546–59
SOUTH CAROLINA

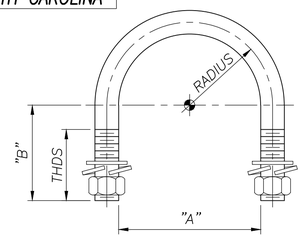


**NOTE 1:**
- UBOLT MATERIAL PROPERTIES TO MEET OR EXCEED A307
- GALV PER A153

**NOTE 2:**
- UBOLT MATERIAL PROPERTIES TO MEET OR EXCEED A307
- ZINC PL PER B633

## ~ U–BOLTS w/(2ea) HN/LW/FW ~

NUTS: ASTM A563,GR.DH OR ASTM A194,GR.2H
WASHERS: ASTM F436 & ANSI–B18.21.1

| MARK | QTY | DIA | "A" | "B" | RADIUS | THDS | MATERIAL |
|---|---|---|---|---|---|---|---|
| U1 | 12 | 5/16 | 1 11/16 | 1 5/8 | 1 | 1 1/4 | NOTE 2 |
| U4 | 24 | 1/2 | 4 5/8 | 4 1/4 | 2 3/16 | 2 | NOTE 1 |

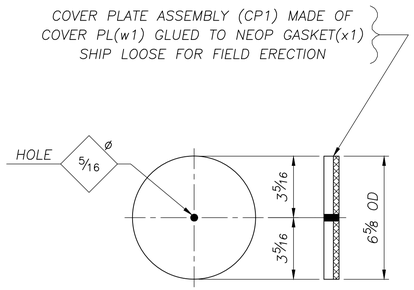


## 1 ~ COVER PLATE ASSEMBLY ~ CP1

| PART MARK NO. | NO. OF PIECES REQ'D. | SECTION SYM | DESCRIPTION OF MATERIAL | LENGTH FEET | LENGTH INCHES | PARTS FOR ONE UNIT |
|---|---|---|---|---|---|---|
| CP1 | 1 | | COVER PLATE ASSEMBLY | | | |
| w1 | 1 | PL | 1/4 x 6 5/8 DIA. (GALV A123) | – | – | 1 |
| x1 | 1 | OP | 1/8 x 6 5/8 DIA. (NEOP GASKET) | – | – | 1 |

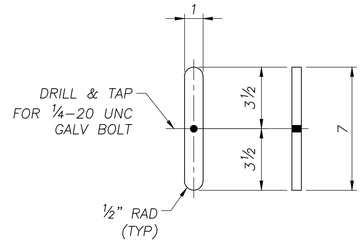


## 1 ~ HANDHOLE BAR ~ HB1

| PART MARK NO. | NO. OF PIECES REQ'D. | SECTION SYM | DESCRIPTION OF MATERIAL | LENGTH FEET | LENGTH INCHES | PARTS FOR ONE UNIT |
|---|---|---|---|---|---|---|
| HB1 | 1 | | HANDHOLE BAR | | | |
| w2 | 1 | PL | 1/4 x 1 (GALV A123) | 0 | 7 | 1 |

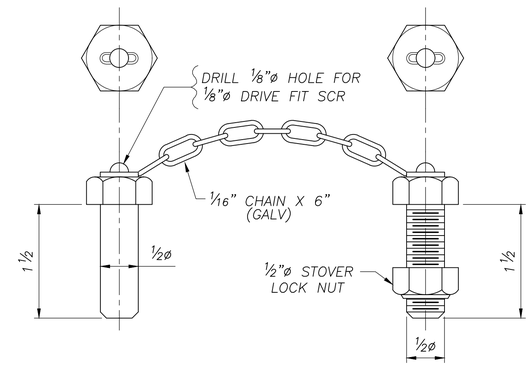


## 6 ~ HINGE PIN ASSEMBLY ~ 59P1

MAT'L SPECS: ASTM A307 (ZINC PL UN)

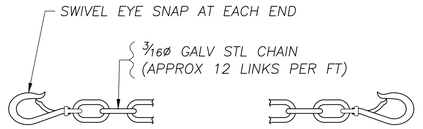


## ~ SAFETY CHAIN ~

| MARK | QTY | LENGTH |
|---|---|---|
| 59S1 | 2 | 4'–6 |

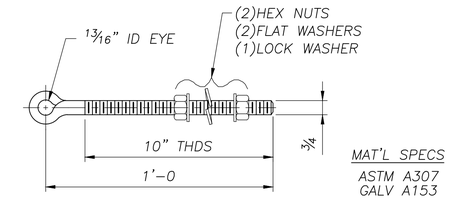


MAT'L SPECS
ASTM A307
GALV A153

## 4 ~ EYE BOLT ASSEMBLY ~ 59M1

NUTS: ASTM A563,GR.DH OR ASTM A194,GR.2H
WASHERS: ASTM F436 & ANSI–B18.21.1

**NOTE:**
SEE GENERAL NOTES DRAWING FOR MATERIAL SPECIFICATIONS, FOUNDATION AND STANDARD NOTES

REF DWGS: E9

OH–29

AASHTO 6th Edition Spec's

SEALED BY:

SOUTH CAROLINA PROFESSIONAL ENGINEER
No. 38665
DAVID A LALLONE
Oct 25 2023

walpar
A valmont COMPANY
POST OFFICE BOX 28650
BIRMINGHAM ALABAMA 35228
4200 JEFFERSON AVENUE
BIRMINGHAM ALABAMA 35221
PHONE (205)–925–4990
FAX (205) 925–7273

| | |
|---|---|
| STATE: | South Carolina |
| FED PROJ: | Carolina Crossroads Phase 1 & 2 |
| ST PROJ: | P039718 |
| COUNTY: | Lexington & Richland |
| ROUTE: | I–26 & I–126 |
| SUBJECT: | SIGN STRUCTURES |
| | MISC DETAILS |
| FOR: | Archer–United Joint Venture |
| DRAWN BY: | DLK DATE: 9/28/23 |
| CHECKED BY: | DLJ DATE: 10/16/23 |
| DWG NO: | C3546–59 |

| NO: | REVISIONS | DATE | MADE | CHECKED |
|---|---|---|---|---|
| 0 | CHECK COMPLETE | 10/16/23 | DLK | DLJ |

KITDWG3

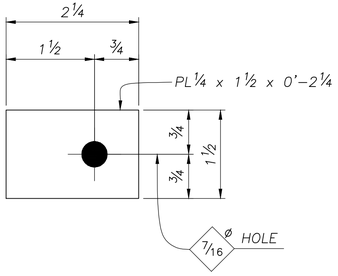


## 12 ~ CLAMP PLATES ~ 60M1

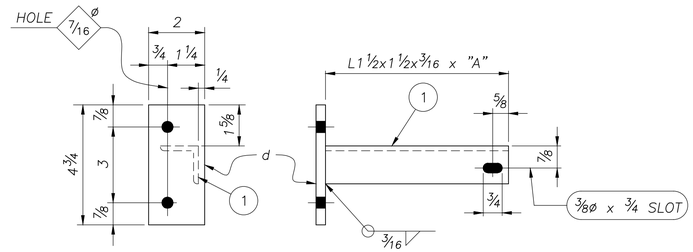


## ~ SAFETY CHAIN SUPPORT ~

(SEE CHART)

| MARK | QTY | "A" | (1) |
|---|---|---|---|
| 60M3 | 2 | 3'-0 | f |

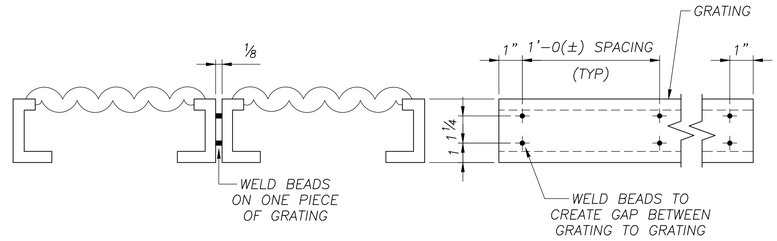


## GRATING GAP DETAIL

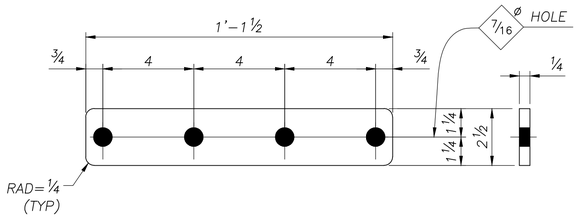


## 2 ~ SPLICE PLATES ~ 60M2

(FOR GRATING)

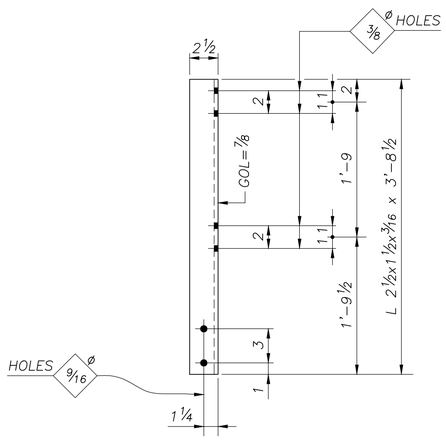


## 6 ~ HANDRAIL POSTS ~ 60P1

(ALUMINUM)

### SHOP NOTE:

GRATING TO BE "GRIP STRUT", OR EQUAL SAFETY GRATING 3" DEEP, FORMED FROM 12 GA SHEETS GALV AFTER FAB WELDED TOGETHER IN A COMBINATION OF THESE SIZES
(1) #8 DIAMOND 18 3/4" WIDE – CAT# 83012 AND
(1) #5 DIAMOND 11 3/4" WIDE – CAT# 53012

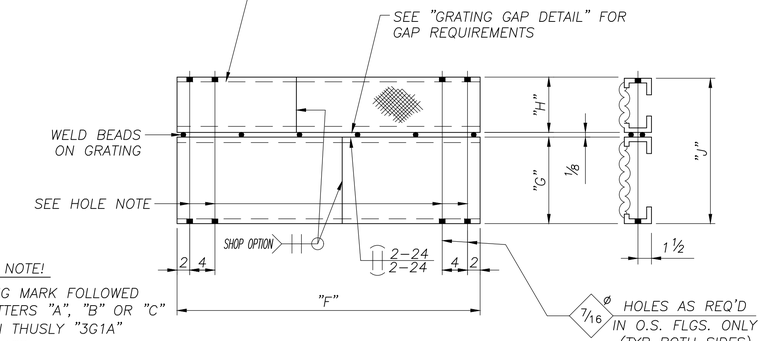


HOLE NOTE!

GRATING MARK FOLLOWED BY LETTERS "A", "B" OR "C" SHOWN THUSLY "3G1A" DESIGNATE:
"A" – NO HOLES
"B" – HOLES 1–END
"C" – HOLES BOTH ENDS

## ~ GRATING ~

(SEE CHART)

| MARK | QTY | "F" | "G" | "H" | "J" |
|---|---|---|---|---|---|
| 60G1B | 2 | 14'-9 1/2 | 1'-6 3/4 | 11 3/4 | 2'-6 5/8 |

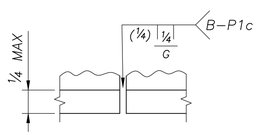


## TOE ANGLE SPLICE

( OPTIONAL )

| PARTS PER CONT | PART MARK NO | NO OF PIECES REQ'D | SECTION SYM | DESCRIPTION OF MATERIAL | LENGTH FEET | LENGTH INCHES | PARTS FOR ONE UNIT | |
|---|---|---|---|---|---|---|---|---|
| | 60M1 | 12 | | CLAMP PLATES | | | | |
| | a | 12 | PL | 1/4 x 1 1/2 | 0 | 2 1/4 | | |
| | 60M2 | 2 | | SPLICE PLATES | | | | |
| | b | 2 | PL | 1/4 x 2 1/2 | 1 | 1 1/2 | | |
| | 60M3 | 2 | | SAFETY CHAIN SUPPORT | | | | |
| | d | 2 | PL | 1/4 x 2 | 0 | 4 3/4 | | |
| | f | 2 | L | 1 1/2 x 1 1/2 x 3/16 | 3 | 0 | | |
| | 60G1B | 2 | | GRATING | | | | |
| | g | 2 | GRT | 18 3/4 WIDE | 14 | 9 1/2 | | |
| | n | 2 | GRT | 11 3/4 WIDE | 14 | 9 1/2 | | |
| | 60P1 | 6 | | HANDRAIL POSTS | | | | |
| | h | 6 | ALL | 2 1/2 x 1 1/2 x 3/16 (ALUM 6061) | 3 | 8 1/2 | | |
| | 60R1 | 2 | | HANDRAIL | | | | |
| | k | 2 | ALPI | 1.660 x .140 (ALUM 6061) | 9 | 11 | | |
| | 60R2 | 4 | | HANDRAIL | | | | |
| | ak | 4 | ALPI | 1.660 x .140 (ALUM 6061) | 9 | 10 | | |
| | 60A1 | 1 | | SAFETY ANGLE | | | | |
| | m | 1 | L | 4 x 3 x 1/4 | 29 | 7 | | |
| | 60L1 | 2 | | LIGHTING SUPPORTS (ALUM 6063-T6) | | | | |
| | p | 2 | ALUN | UNISTRUT 1 5/8 x 1 5/8 x .105 | 10 | 0 | | |
| | 60L2 | 2 | | LIGHTING SUPPORTS (ALUM 6063-T6) | | | | |
| | ap | 2 | ALUN | UNISTRUT 1 5/8 x 1 5/8 x .105 | 13 | 0 | | |

C3546-60

## NOTE:

SEE GENERAL NOTES DRAWING FOR MATERIAL SPECIFICATIONS, FOUNDATION AND STANDARD NOTES

REF DWG: E9

OH-29

AASHTO 6th Edition Spec's

SEALED BY:

SOUTH CAROLINA PROFESSIONAL ENGINEER
No. 38665
DAVID A LALLONE

Oct 25 2023


walpar
A valmont COMPANY
POST OFFICE BOX 28650
BIRMINGHAM ALABAMA 35228
4200 JEFFERSON AVENUE
BIRMINGHAM ALABAMA 35221
PHONE (205)-925-4990
FAX (205) 925-7273


| NO: | REVISIONS | DATE | MADE | CHECKED |
|---|---|---|---|---|
| 0 | CHECK COMPLETE | 10/16/23 | DLK | DLJ |

STATE: South Carolina
FED PROJ: Carolina Crossroads Phase 1 & 2
ST PROJ: P039718
COUNTY: Lexington & Richland
ROUTE: I-26 & I-126

SUBJECT: SIGN STRUCTURE
MISC DETAILS
FOR: Archer-United Joint Venture

DRAWN BY: DLK DATE: 10/2/23
CHECKED BY: DLJ DATE: 10/16/23
DWG NO: C3546-60

WalkWayDetails

NAME: E:\acad\JobsNPrg\3546\3546-60.dwg DATE: OCT 16, 2023 TIME: 4:33 AM dj706290

| MARK | QTY | "A" | "B" | "C" | "D" | "E" | "F" | "G" | "H" |
|---|---|---|---|---|---|---|---|---|---|
| 61C1 | 1 | 28'–4¼ | 24'–4¼ | 4'–0 | 3'–0 | 1'–3 | 4 @ 3¾ = 1'–3 | 1'–4¾ | 5 @ 3 = 1'–3 |

| MARK | "J" | "K" | "L" | "M" | "N" QTY | "N" DIA | "P" | "S" | "T" | 1 | 2 | 3 | 4 | 5 | 6 | 7 | 8 |
|---|---|---|---|---|---|---|---|---|---|---|---|---|---|---|---|---|---|
| 61C1 | 2½ | 2½ | 7⅛ | 5/16 | 12 | 2 | 2½ | 2'–6 1/16 | ¼ | a | b | d | f | k | k | n | h |

| PARTS PER CONT | PART MARK NO | NO. OF PIECES REQ'D | SECTION SYM | DESCRIPTION OF MATERIAL | LENGTH FEET | LENGTH INCHES | PARTS FOR ONE UNIT |
|---|---|---|---|---|---|---|---|
| | 61C1 | 1 | | CANTILEVER POST | | | |
| | a | 1 | PIPE | 30.000 x .500 | 28 | 3 7/16 | |
| | b | 1 | PL | 1¾ x 41 DIA. | – | – | |
| | d | 1 | PL | ½ x 36 | 3 | 0 | |
| | f | 1 | PL | ½ x 36 | 3 | 0 | |
| | k | 8 | PL | ½ x 2½ | 0 | 2½ | |
| | n | 8 | PL | ½ x 7⅛ | 0 | 7⅛ | |
| | h | 12 | PL | ½ x 5 | 1 | 0 | |
| | v1 | 1 | PIPE | 6.625 x .864 | 0 | 3 | |
| | z1 | 3 | OP | 1¼" FORGED HALF CPLG (3000#) | – | – | |

C3546–61

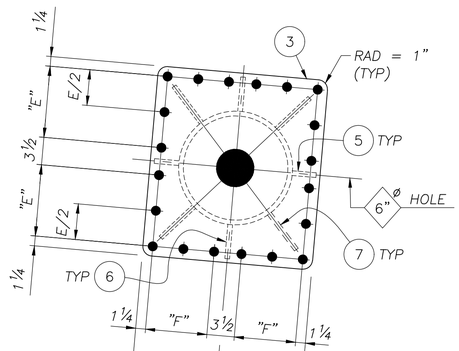


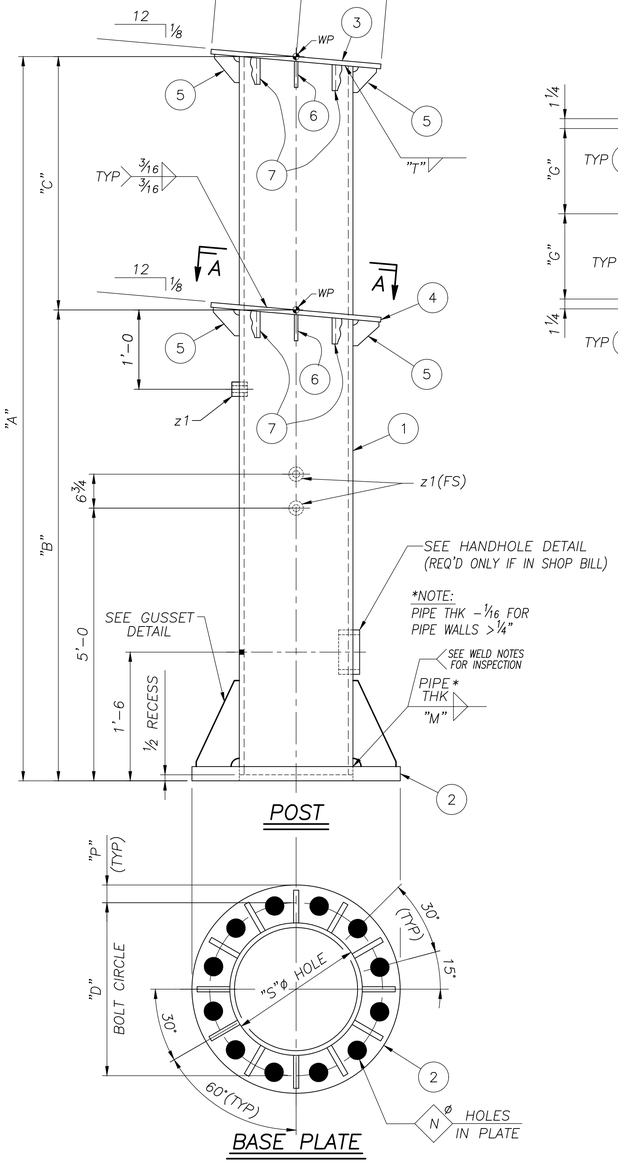


POST




BASE PLATE

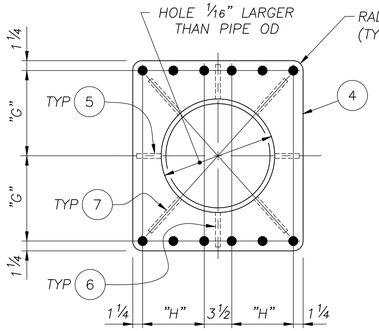


SECTION A–A

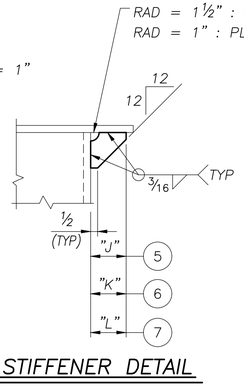


STIFFENER DETAIL

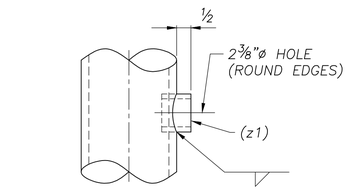


WIRE OUTLET DETAIL

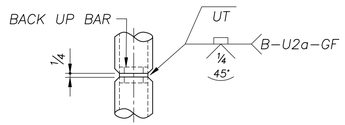


OPTIONAL SPLICE

(FOR WALL THK 5/16" OR GREATER ONLY)

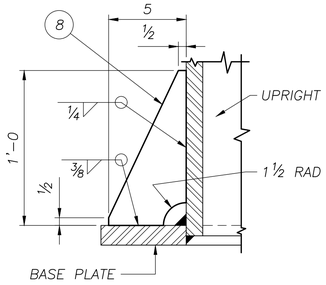


TYP GUSSET DETAIL

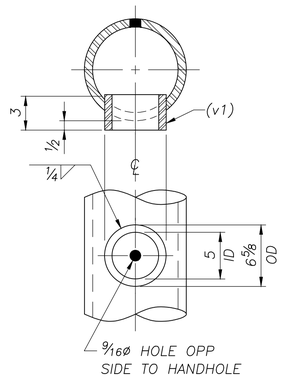


HANDHOLE DETAIL

**NOTE:**
ALL HOLES TO BE 7/8 ø UNLESS NOTED

**NOTE:**
SEE GENERAL NOTES DRAWING FOR MATERIAL SPECIFICATIONS, FOUNDATION AND STANDARD NOTES

REF DWG: E9

OH–29

AASHTO 6th Edition Spec's

SEALED BY:

SOUTH CAROLINA PROFESSIONAL ENGINEER
No. 38665
DAVID A LALLOUE

Oct 25 2023

| NO: | REVISIONS | DATE | MADE | CHECKED |
|---|---|---|---|---|
| 0 | CHECK COMPLETE | 10/16/23 | DLK | DLJ |


walpar
A valmont COMPANY
POST OFFICE BOX 28650
BIRMINGHAM ALABAMA 35228
4200 JEFFERSON AVENUE
BIRMINGHAM ALABAMA 35221
PHONE (205)–925–4990
FAX (205) 925–7273


0

STATE: South Carolina
FED PROJ: Carolina Crossroads Phase 1 & 2
ST PROJ: P039718
COUNTY: Lexington & Richland
ROUTE: I–26 & I–126

SUBJECT: CANTILEVER SIGN SUPPORT
DETAILS OF UPRIGHT
FOR: Archer–United Joint Venture

DRAWN BY: DLK DATE: 9/28/23
CHECKED BY: DLJ DATE: 10/16/23
DWG NO: C3546–61

CBTUPDET


NAME: E:\acad\JobsNPrg\3546\3546–61.dwg DATE: OCT 16, 2023 TIME: 4:33 AM dj706290

| MARK | QTY | "A" | "C" | PANELS | "D" | "E" | "F" | "G" | "H" | "J" | "K" | "L" | "M" | "N" | "P" | "W" | "X" | "Y" | "Z" |
|---|---|---|---|---|---|---|---|---|---|---|---|---|---|---|---|---|---|---|---|
| 62T1 | 1 | 36'–9¾ | 4'–0 | 8 @ 4'–1(±) = 32'–8¼ | 3'–6 | 1'–3 | 4 @ 3¾ = 1'–3 | 2'–9½ | 5 @ 3 = 1'–3 | 17'–1⅛ | 3'–4½ | 4¼ | 2½ | 2½ | 4½ | ¼ | 1 | 7½ | 4 |

| MARK | "R" | "S" | "T" | "V" | 1 | 2 | 3 | 4 | 5 | 6 | 7 | 8 | 9 | 10 | 11 |
|---|---|---|---|---|---|---|---|---|---|---|---|---|---|---|---|
| 62T1 | 3'–10½ | 31'–11 1⁄16 | ------- | ------- | a | b | d | f | g | h | k | m | n | p | z1 |

| VENT HOLE SIZES | |
|---|---|
| WEB MEMBER (OD) | HOLE DIA ± ¼" |
| < 3.500 | ¾ |
| 3.500 | 1¾ |
| 4.000 | 2 |
| 4.500 | 2¼ |
| 5.563 | 2¾ |
| 6.625 | 3¼ |

| | | | | | | | | | | |
|---|---|---|---|---|---|---|---|---|---|---|
| | | | | | | | | C3546–62 | | |
| PARTS PER CONT | PART MARK NO | NO OF PIECES REQ'D | SECTION SYM | DESCRIPTION OF MATERIAL | LENGTH FEET | LENGTH INCHES | PARTS FOR ONE UNIT | |
| | 62T1 | 1 | | CANTILEVER TRUSS | | | | |
| | a | 4 | PIPE | 4.500 x .237 | 36 | 9⅜ | | |
| | b | 18 | PIPE | 1.660 x .140 | 3 | 7 11⁄16 | | |
| | d | 16 | PIPE | 1.660 x .140 | 5 | 2⅛ | | |
| | f | 3 | PIPE | 1.900 x .200 | 3 | 1¾ | | |
| | g | 16 | PIPE | 1.900 x .200 | 4 | 9 15⁄16 | | |
| | h | 4 | PIPE | 1.900 x .145 | 4 | 11 9⁄16 | | |
| | k | 1 | PL | ½ x 36 | 3 | 11½ | | |
| | m | 2 | PL | ½ x 8¼ | 3 | 0 | | |
| | n | 4 | PL | ¼ x 2½ | 0 | 4¼ | | |
| | p | 4 | PL | ¾ x 10½ DIA. | – | – | | |
| | z1 | 2 | OP | 1¼" FORGED HALF CPLG (3000#) | – | – | | |

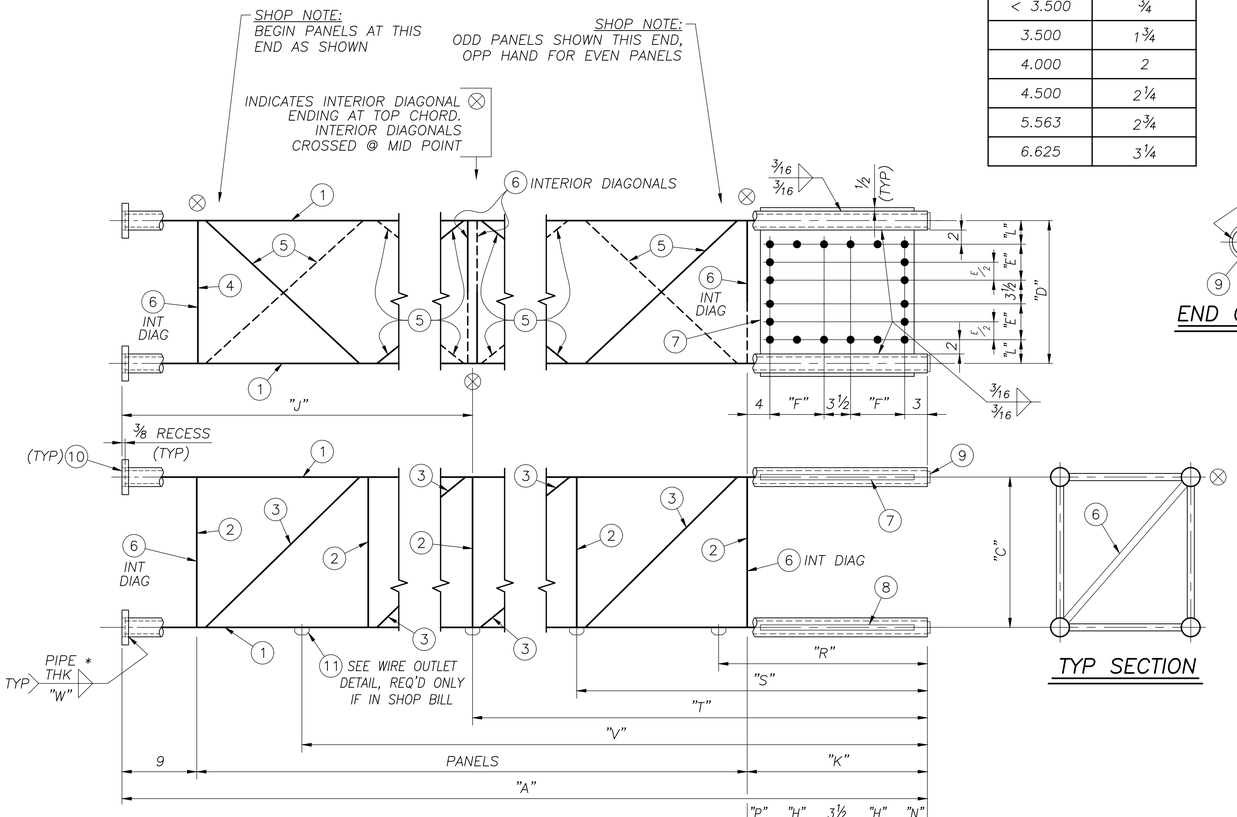


## TYP SECTION

*NOTE: PIPE THK – 1⁄16" FOR PIPE WALLS > ¼"

## TRUSS

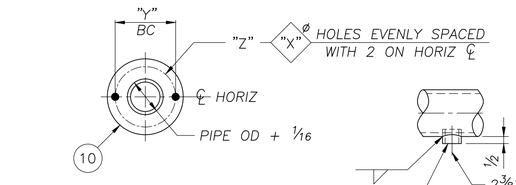


## FLANGE DETAIL

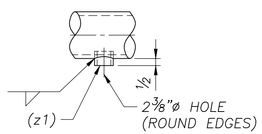


## WIRE OUTLET DETAIL

SHOP NOTE: INTERIOR DIAGONALS MAY BE OFFSET UP TO 6" FROM PANEL POINTS ON TRUSS IN ORDER TO AVOID INTERSECTING WELDS IN THE AREA OF OTHER WEB MEMBERS. DO NOT OFFSET MEMBERS SO AS TO INTERFERE WITH BOLTED CONNECTIONS AT FIELD SPLICES.

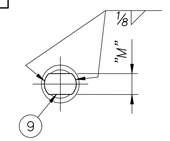


## END CAP DETAIL

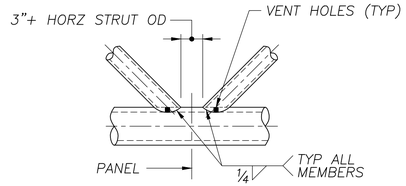


## JOINT DETAIL

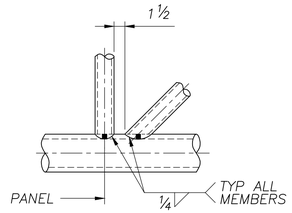


## JOINT DETAIL

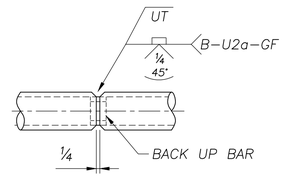


## OPTIONAL CHORD SPLICE

(FOR WALL THK 5⁄16" OR GREATER ONLY)

**NOTE:**
ALL HOLES TO BE Ø 7⁄8 UNLESS NOTED

**NOTE:**
SEE GENERAL NOTES DRAWING FOR MATERIAL SPECIFICATIONS, FOUNDATION AND STANDARD NOTES

REF DWG: E9

OH–29

AASHTO 6th Edition Spec's

SEALED BY:

SOUTH CAROLINA PROFESSIONAL ENGINEER No. 38665 DAVID A LALLONE

Oct 25 2023


walpar A valmont COMPANY
POST OFFICE BOX 28650
BIRMINGHAM ALABAMA 35228
4200 JEFFERSON AVENUE
BIRMINGHAM ALABAMA 35221
PHONE (205)–925–4990
FAX (205) 925–7273


0

| | |
|---|---|
| STATE: | South Carolina |
| FED PROJ: | Carolina Crossroads Phase 1 & 2 |
| ST PROJ: | P039718 |
| COUNTY: | Lexington & Richland |
| ROUTE: | I–26 & I–126 |
| SUBJECT: | CANTILEVER SIGN SUPPORT<br>DETAIL OF TRUSS |
| FOR: | Archer–United Joint Venture |
| DRAWN BY: | DLK DATE: 9/28/23 |
| CHECKED BY: | DLJ DATE: 10/16/23 |
| DWG NO: | C3546–62 |

| NO: | REVISIONS | DATE | MADE | CHECKED |
|---|---|---|---|---|
| 0 | CHECK COMPLETE | 10/16/23 | DLK | DLJ |

CBTSDET

NAME: E:\acad\JobsNPrg\3546\3546–62.dwg DATE: OCT 16, 2023 TIME: 4:33 AM dj706290

| MARK | QTY | "B" | "C" | PANELS | "D" | | | | | | | | "M" | | | "W" | "X" | "Y" | "Z" |
|---|---|---|---|---|---|---|---|---|---|---|---|---|---|---|---|---|---|---|---|
| 63T1 | 1 | 9'–8 | 4'–0 | 2 @ 4'–1(±) = 8'–2 | 3'–6 | | | | | | | | 2½ | | | ¼ | 1 | 7½ | 4 |

| MARK | | "S" | "T" | "V" | ① | ② | ③ | ④ | ⑤ | ⑥ | | | ⑨ | ⑩ | ⑪ |
|---|---|---|---|---|---|---|---|---|---|---|---|---|---|---|---|
| 63T1 | | 4'–10 | ------ | ------ | a | b | d | f | g | h | | | n | p | z1 |

| | | | | | C3546–63 | | |
|---|---|---|---|---|---|---|---|
| PARTS PER CONT | PART MARK NO | NO OF PIECES REQ'D | SECTION SYM | DESCRIPTION OF MATERIAL | LENGTH FEET | LENGTH INCHES | PARTS FOR ONE UNIT |
| | 63T1 | 1 | | CANTILEVER TRUSS | | | |
| | a | 4 | PIPE | 4.500 x .237 | 9 | 7 5/8 | |
| | b | 6 | PIPE | 1.660 x .140 | 3 | 7 11/16 | |
| | d | 4 | PIPE | 1.660 x .140 | 5 | 2 1/8 | |
| | f | 4 | PIPE | 1.900 x .200 | 3 | 1 3/4 | |
| | g | 4 | PIPE | 1.900 x .200 | 4 | 9 15/16 | |
| | h | 2 | PIPE | 1.900 x .145 | 4 | 11 9/16 | |
| | n | 4 | PL | ¼ x 2½ | 0 | 4¼ | |
| | p | 4 | PL | ¾ x 10½ DIA. | – | – | |
| | z1 | 1 | OP | 1¼" FORGED HALF CPLG (3000#) | – | – | |

SHOP NOTE:
ODD PANELS SHOWN THIS END, OPP HAND FOR EVEN PANELS

SHOP NOTE:
BEGIN PANELS AT THIS END AS SHOWN

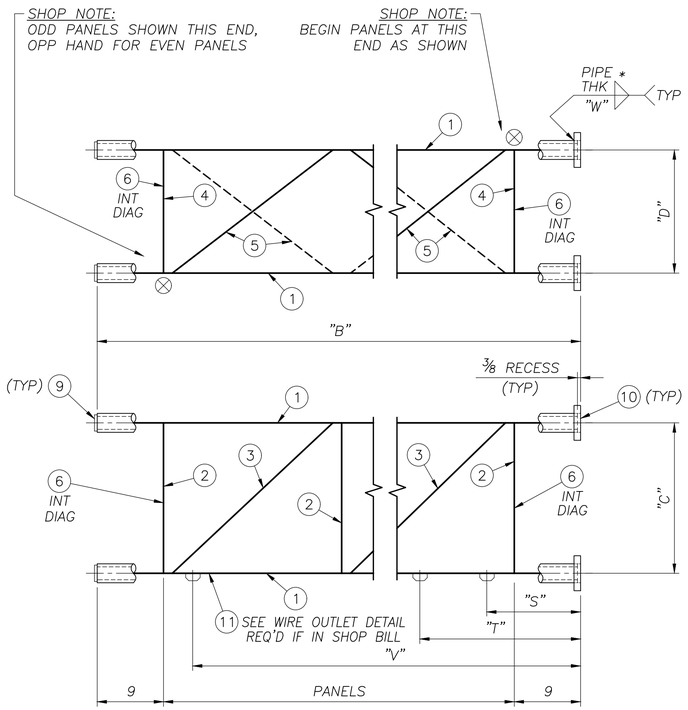


⊗ INDICATES INTERIOR DIAGONAL ENDING AT TOP CHORD

## TRUSS

*NOTE: PIPE THK – 1/16" FOR PIPE WALLS > ¼"

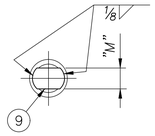


## END CAP DETAIL

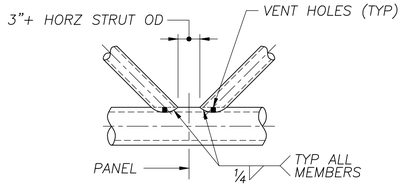


## JOINT DETAIL

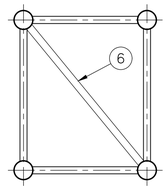


## TYP SECTION

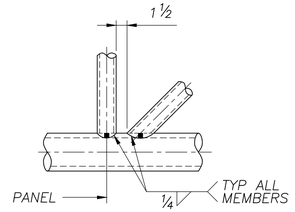


## JOINT DETAIL

| VENT HOLE SIZES | |
|---|---|
| WEB MEMBER OD | HOLE DIA ± ¼" |
| < 3.500 | ¾ |
| 3.500 | 1¾ |
| 4.000 | 2 |
| 4.500 | 2¼ |
| 5.563 | 2¾ |
| 6.625 | 3¼ |

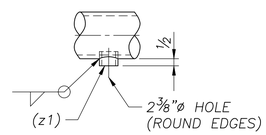


## WIRE OUTLET DETAIL

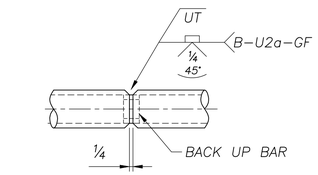


## OPTIONAL CHORD SPLICE

(FOR WALL THK 5/16" OR GREATER ONLY)

SHOP NOTE:

INTERIOR DIAGONALS MAY BE OFFSET UP TO 6" FROM PANEL POINTS ON TRUSS IN ORDER TO AVOID INTERSECTING WELDS IN THE AREA OF OTHER WEB MEMBERS.

DO NOT OFFSET MEMBERS SO AS TO INTERFERE WITH BOLTED CONNECTIONS AT FIELD SPLICES.

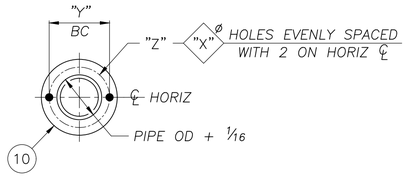


## FLANGE DETAIL

NOTE:
SEE GENERAL NOTES DRAWING FOR MATERIAL SPECIFICATIONS, FOUNDATION AND STANDARD NOTES

REF DWG: E9

OH–29

AASHTO 6th Edition Spec's

SEALED BY:

SOUTH CAROLINA PROFESSIONAL ENGINEER
No. 38665
DAVID A LALLONE

Oct 25 2023


walpar
A valmont COMPANY
POST OFFICE BOX 28650
BIRMINGHAM ALABAMA 35228
4200 JEFFERSON AVENUE
BIRMINGHAM ALABAMA 35221
PHONE (205)–925–4990
FAX (205) 925–7273


| | |
|---|---|
| STATE: | South Carolina |
| FED PROJ: | Carolina Crossroads Phase 1 & 2 |
| ST PROJ: | P039718 |
| COUNTY: | Lexington & Richland |
| ROUTE: | I–26 & I–126 |
| SUBJECT: | CANTILEVER SIGN SUPPORT DETAIL OF TRUSS |
| FOR: | Archer–United Joint Venture |
| DRAWN BY: | DLK DATE: 9/28/23 |
| CHECKED BY: | DLJ DATE: 10/16/23 |
| DWG NO: | C3546–63 |

| NO: | REVISIONS | DATE | MADE | CHECKED |
|---|---|---|---|---|
| 0 | CHECK COMPLETE | 10/16/23 | DLK | DLJ |


NAME: E:\acad\JobsNPrg\3546\3546–63.dwg DATE: OCT 16, 2023 TIME: 4:32 AM dj706290
CBTESDET

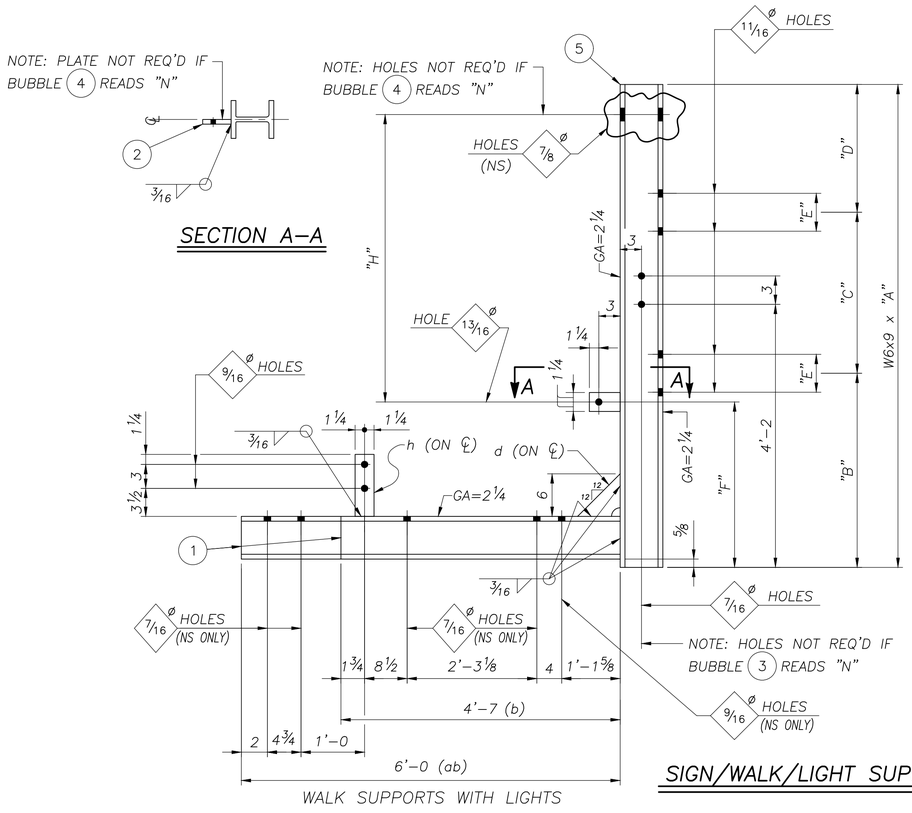


WALK SUPPORTS WITH LIGHTS

## SIGN/WALK/LIGHT SUPPORTS

| MARK | QTY | "A" | "B" | "C" | "D" | "E" | "F" | "H" | 1 | 2 | 3 | 4 | 5 |
|---|---|---|---|---|---|---|---|---|---|---|---|---|---|
| 64S1 | 1 | 9'–8 | 5'–2 | 4'–0 | 6 | 5 1/8 | ---- | ---- | b | – | Y | N | a |
| 64S2 | 1 | 9'–8 | 5'–2 | 4'–0 | 6 | 5 1/8 | ---- | ---- | b | – | N | N | aa |
| 64S3 | 2 | 12'–2 | 5'–2 | 4'–0 | 3'–0 | 5 1/8 | 2'–3 1/4 | 9'–8 | ab | f | N | Y | ba |
| 64S4 | 1 | 9'–8 | 5'–2 | 4'–0 | 6 | 5 1/8 | 2'–3 1/4 | 6'–5 | ab | f | N | Y | da |
| 64S5 | 1 | 9'–8 | 5'–2 | 4'–0 | 6 | 5 1/8 | 2'–3 1/4 | 6'–5 | ab | f | Y | Y | fa |

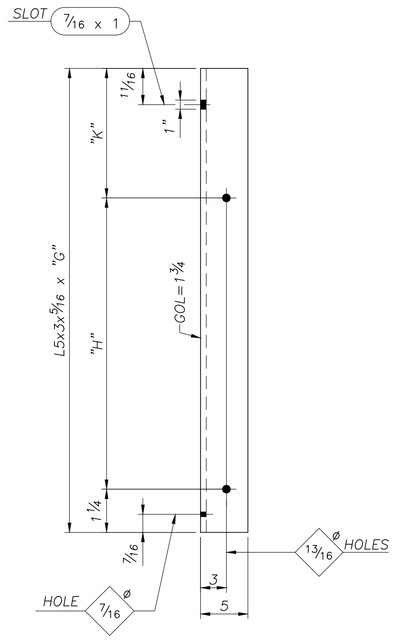


## SIGN HANGERS

| MARK | QTY | "G" | "H" | "K" |
|---|---|---|---|---|
| 64H1 | 2 | 14'–6 1/4 | 9'–8 | 4'–9 |
| 64H2 | 2 | 10'–0 1/4 | 6'–5 | 3'–6 |

| | | | | | C3546–64 | | | |
|---|---|---|---|---|---|---|---|---|
| PARTS PER CONT | PART MARK NO | NO OF PIECES REQ'D | SECTION SYM | DESCRIPTION OF MATERIAL | LENGTH FEET | LENGTH INCHES | PARTS FOR ONE UNIT | |
| | 64S1 | 1 | | WALK SUPPORT | | | | |
| | a | 1 | W | 6 x 9 | 9 | 8 | | |
| | b | 1 | W | 6 x 9 | 4 | 7 | | |
| | d | 1 | PL | 1/4 x 6 | 0 | 6 | | |
| | h | 1 | PL | 1/2 x 2 1/2 | 0 | 7 3/4 | | |
| | 64S2 | 1 | | WALK SUPPORT | | | | |
| | aa | 1 | W | 6 x 9 | 9 | 8 | | |
| | b | 1 | W | 6 x 9 | 4 | 7 | | |
| | d | 1 | PL | 1/4 x 6 | 0 | 6 | | |
| | h | 1 | PL | 1/2 x 2 1/2 | 0 | 7 3/4 | | |
| | 64S3 | 2 | | SIGN/WALK/LIGHT SUPPORTS | | | | |
| | ba | 2 | W | 6 x 9 | 12 | 2 | | |
| | ab | 2 | W | 6 x 9 | 6 | 0 | | |
| | d | 2 | PL | 1/4 x 6 | 0 | 6 | | |
| | f | 2 | PL | 3/8 x 2 1/2 | 0 | 4 1/4 | | |
| | h | 2 | PL | 1/2 x 2 1/2 | 0 | 7 3/4 | | |
| | 64S4 | 1 | | SIGN/WALK/LIGHT SUPPORT | | | | |
| | da | 1 | W | 6 x 9 | 9 | 8 | | |
| | ab | 1 | W | 6 x 9 | 6 | 0 | | |
| | d | 1 | PL | 1/4 x 6 | 0 | 6 | | |
| | f | 1 | PL | 3/8 x 2 1/2 | 0 | 4 1/4 | | |
| | h | 1 | PL | 1/2 x 2 1/2 | 0 | 7 3/4 | | |
| | 64S5 | 1 | | SIGN/WALK/LIGHT SUPPORT | | | | |
| | fa | 1 | W | 6 x 9 | 9 | 8 | | |
| | ab | 1 | W | 6 x 9 | 6 | 0 | | |
| | d | 1 | PL | 1/4 x 6 | 0 | 6 | | |
| | f | 1 | PL | 3/8 x 2 1/2 | 0 | 4 1/4 | | |
| | h | 1 | PL | 1/2 x 2 1/2 | 0 | 7 3/4 | | |
| | | | | | | | | |
| | 64H1 | 2 | | SIGN HANGERS | | | | |
| | k | 2 | L | 5 x 3 x 5/16 | 14 | 6 1/4 | | |
| | 64H2 | 2 | | SIGN HANGERS | | | | |
| | ak | 2 | L | 5 x 3 x 5/16 | 10 | 0 1/4 | | |

**NOTE:**
SEE GENERAL NOTES DRAWING FOR MATERIAL SPECIFICATIONS, FOUNDATION AND STANDARD NOTES

REF DWG: E9

OH–29

AASHTO 6th Edition Spec's

SEALED BY:

SOUTH CAROLINA PROFESSIONAL ENGINEER
DAVID A LALLONE
No. 38665
Oct 25 2023

| NO: | REVISIONS | DATE | MADE | CHECKED |
|---|---|---|---|---|
| 0 | CHECK COMPLETE | 10/16/23 | DLK | DLJ |


walpar
A valmont COMPANY
POST OFFICE BOX 28650
BIRMINGHAM ALABAMA 35228
4200 JEFFERSON AVENUE
BIRMINGHAM ALABAMA 35221
PHONE (205)–925–4990
FAX (205) 925–7273


| | |
|---|---|
| STATE: | South Carolina |
| FED PROJ: | Carolina Crossroads Phase 1 & 2 |
| ST PROJ: | P039718 |
| COUNTY: | Lexington & Richland |
| ROUTE: | I–26 & I–126 |
| SUBJECT: | SIGN SUPPORT<br>WALK SUPPORT & SIGN HANGER DETAILS |
| FOR: | Archer–United Joint Venture |
| DRAWN BY: | DLK DATE: 9/29/23 |
| CHECKED BY: | DLJ DATE: 10/16/23 |
| DWG NO: | C3546–64 |

SH–DET4

NAME: E:\acad\JobsNPrg\3546\3546–64.dwg DATE: OCT 16, 2023 TIME: 4:32 AM dj706290

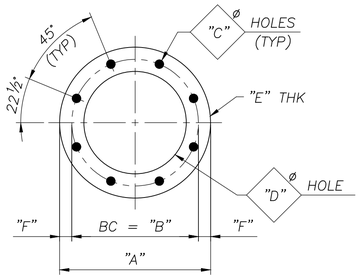


TYPE "DD"
(SEE CHART FOR INFORMATION)

## ANCHOR TEMPLATE CHART (ALL DIMENSIONS IN INCHES)

| MARK | QTY | TYPE | "A" | "B" | "C" | "D" | "E" | "F" |
|---|---|---|---|---|---|---|---|---|
| 65P1 | 2 | DD | 40 | 36 | 2⅛ | 32 | ¼ | 2 |

**NOTE:**
THREADS (ROLLED OR CUT) FOR "H" NUT

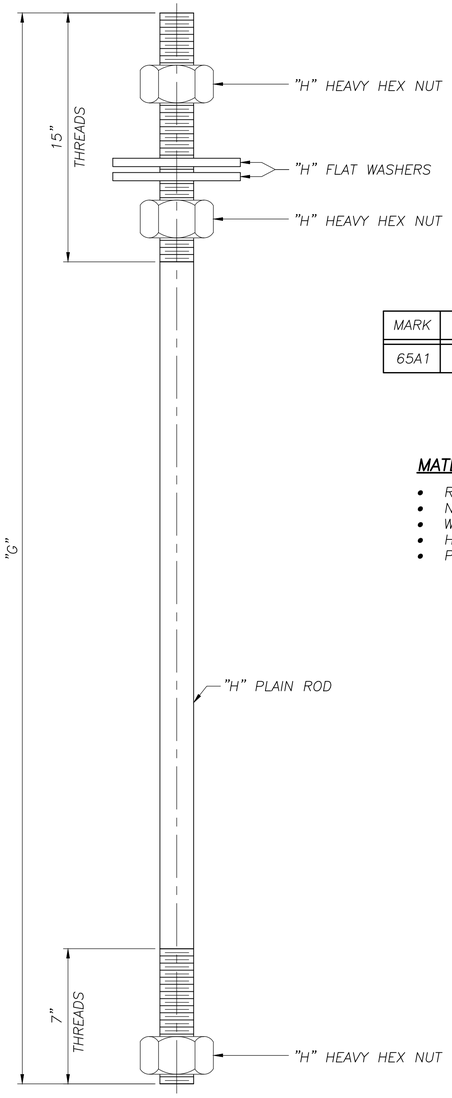


## ~ ANCHOR BOLTS ~

| MARK | "G" | "H"ø | (TPI) | ROD QTY | NUT QTY | FW QTY | |
|---|---|---|---|---|---|---|---|
| 65A1 | 4'–6 | 2 | 4½ | 8 | 24 | 16 | |

**MATERIAL SPECS:**

- RODS – ASTM F1554, GRADE 55, S1
- NUTS – ASTM A563,GR.DH OR ASTM A194,GR.2H
- WASHERS – ASTM F436
- HARDWARE – GALV PER ASTM–A153
- PLAIN ROD – GALV FULL LENGTH PER ASTM–A153

| PARTS PER CONT | PART MARK NO | NO OF PIECES REQ'D | SECTION SYM | DESCRIPTION OF MATERIAL | LENGTH FEET | LENGTH INCHES | PARTS FOR ONE UNIT |
|---|---|---|---|---|---|---|---|
| | 65P1 | 2 | | ANCHOR TEMPLATES | | | |
| | a | 2 | PL | ¼ x 40 DIA | – | – | |

C3546–65

| SHIPPING LIST | | |
|---|---|---|
| QTY | MARK | DESCRIPTION |
| 2 | 65P1 | ANCHOR TEMPLATES |
| 8 | 65A1 | ANCHOR BOLTS |

## NOTE: SHOP SHIP FROM THIS DRAWING

**NOTE:**
DO NOT GALVANIZE TEMPLATES

**NOTE:**
SEE GENERAL NOTES DRAWING FOR MATERIAL SPECIFICATIONS, FOUNDATION AND STANDARD NOTES

REF DWG: E10

OH–30

AASHTO 6th Edition Spec's

SEALED BY:

SOUTH CAROLINA LICENSED PROFESSIONAL ENGINEER
No. 38665
DAVID A LALLOUE

Oct 25 2023

walpar
A valmont COMPANY
POST OFFICE BOX 28650
BIRMINGHAM ALABAMA 35228
4200 JEFFERSON AVENUE
BIRMINGHAM ALABAMA 35221
PHONE (205)–925–4990
FAX (205) 925–7273

| NO: | REVISIONS | DATE | MADE | CHECKED |
|---|---|---|---|---|
| 0 | CHECK COMPLETE | 10/16/23 | DLK | DLJ |

STATE: South Carolina
FED PROJ: Carolina Crossroads Phase 1 & 2
ST PROJ: P039718
COUNTY: Lexington & Richland
ROUTE: I–26 & I–126

SUBJECT: SIGN STRUCTURE
ANCHOR TEMPLATE & SOLE PLATE DETAILS
FOR: Archer–United Joint Venture

DRAWN BY: DLK DATE: 9/29/23
CHECKED BY: DLJ DATE: 10/16/23
DWG NO: C3546–65

C3546–66
SOUTH CAROLINA

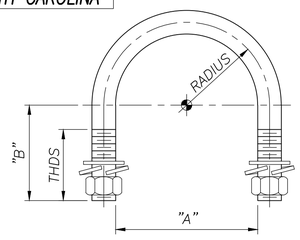


**NOTE 1:**
- UBOLT MATERIAL PROPERTIES TO MEET OR EXCEED A307
- GALV PER A153

**NOTE 2:**
- UBOLT MATERIAL PROPERTIES TO MEET OR EXCEED A307
- ZINC PL PER B633

## ~ U–BOLTS w/(2ea) HN/LW/FW ~

NUTS: ASTM A563,GR.DH OR ASTM A194,GR.2H
WASHERS: ASTM F436 & ANSI–B18.21.1

| MARK | QTY | DIA | "A" | "B" | RADIUS | THDS | MATERIAL |
|---|---|---|---|---|---|---|---|
| U1 | 14 | 5/16 | 1 11/16 | 1 5/8 | 1 | 1 1/4 | NOTE 2 |
| U3 | 28 | 1/2 | 3 5/8 | 3 3/4 | 2 1/16 | 2 | NOTE 1 |

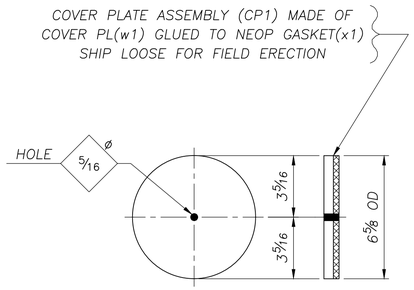


## 1 ~ COVER PLATE ASSEMBLY ~ CP1

| PART MARK NO | NO OF PIECES REQ'D | SECTION SYM | DESCRIPTION OF MATERIAL | LENGTH FEET | LENGTH INCHES | PARTS FOR ONE UNIT |
|---|---|---|---|---|---|---|
| CP1 | 1 | | COVER PLATE ASSEMBLY | | | |
| w1 | 1 | PL | 1/4 x 6 5/8 DIA. (GALV A123) | – | – | 1 |
| x1 | 1 | OP | 1/8 x 6 5/8 DIA. (NEOP GASKET) | – | – | 1 |

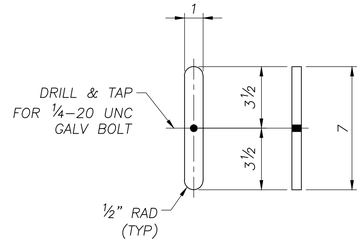


## 1 ~ HANDHOLE BAR ~ HB1

| PART MARK NO | NO OF PIECES REQ'D | SECTION SYM | DESCRIPTION OF MATERIAL | LENGTH FEET | LENGTH INCHES | PARTS FOR ONE UNIT |
|---|---|---|---|---|---|---|
| HB1 | 1 | | HANDHOLE BAR | | | |
| w2 | 1 | PL | 1/4 x 1 (GALV A123) | 0 | 7 | 1 |

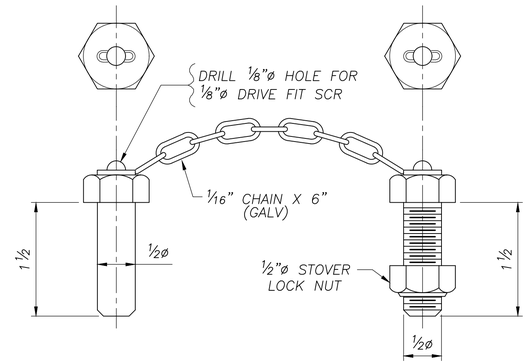


## 7 ~ HINGE PIN ASSEMBLY ~ 66P1

MAT'L SPECS: ASTM A307 (ZINC PL UN)

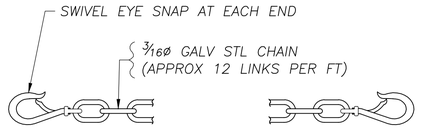


## ~ SAFETY CHAIN ~

| MARK | QTY | LENGTH |
|---|---|---|
| 66S1 | 2 | 4'–6 |

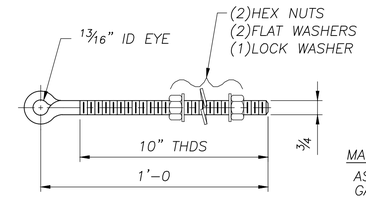


MAT'L SPECS
ASTM A307
GALV A153

## 4 ~ EYE BOLT ASSEMBLY ~ 66M1

NUTS: ASTM A563,GR.DH OR ASTM A194,GR.2H
WASHERS: ASTM F436 & ANSI–B18.21.1

**NOTE:**
SEE GENERAL NOTES DRAWING FOR MATERIAL SPECIFICATIONS, FOUNDATION AND STANDARD NOTES

REF DWGS: E10

OH–30

AASHTO 6th Edition Spec's

SEALED BY:

SOUTH CAROLINA PROFESSIONAL ENGINEER
No. 38665
DAVID A LALLONE
Oct 25 2023

walpar
A valmont COMPANY
POST OFFICE BOX 28650
BIRMINGHAM ALABAMA 35228
4200 JEFFERSON AVENUE
BIRMINGHAM ALABAMA 35221
PHONE (205)–925–4990
FAX (205) 925–7273

| NO: | REVISIONS | DATE | MADE | CHECKED |
|---|---|---|---|---|
| 0 | CHECK COMPLETE | 10/16/23 | DLK | DLJ |

STATE: South Carolina
FED PROJ: Carolina Crossroads Phase 1 & 2
ST PROJ: P039718
COUNTY: Lexington & Richland
ROUTE: I–26 & I–126

SUBJECT: SIGN STRUCTURES
MISC DETAILS
FOR: Archer–United Joint Venture

DRAWN BY: DLK DATE: 9/29/23
CHECKED BY: DLJ DATE: 10/16/23
DWG NO: C3546–66

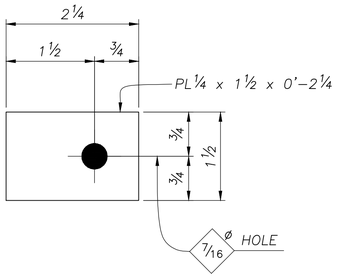


## 14 ~ CLAMP PLATES ~ 67P1

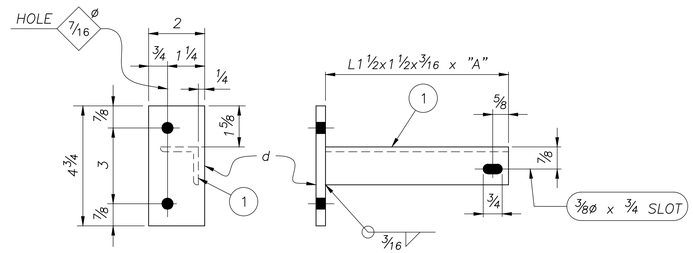


## ~ SAFETY CHAIN SUPPORT ~

(SEE CHART)

| MARK | QTY | "A" | (1) | d | f |
|---|---|---|---|---|---|
| 67M3 | 2 | 3'-0 | | | |

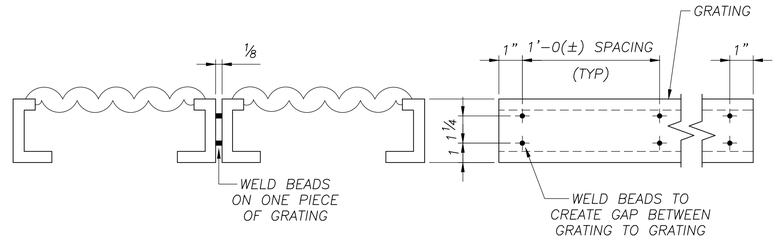


## GRATING GAP DETAIL

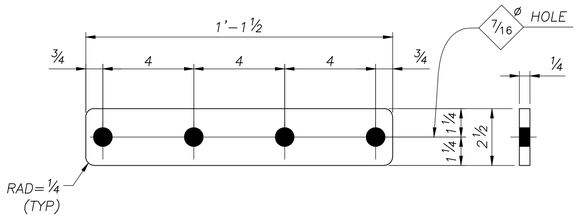


## 2 ~ SPLICE PLATES ~ 67M2

(FOR GRATING)

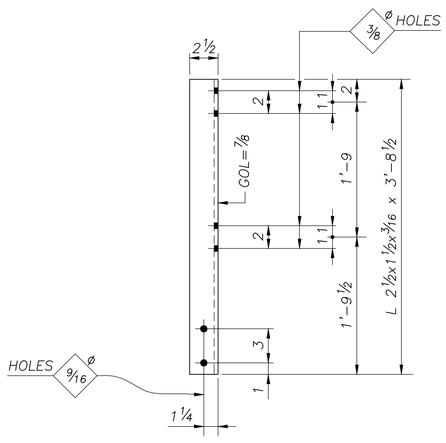


## 7 ~ HANDRAIL POSTS ~ 67P1

(ALUMINUM)

### SHOP NOTE:

GRATING TO BE "GRIP STRUT", OR EQUAL SAFETY GRATING 3" DEEP, FORMED FROM 12 GA SHEETS GALV AFTER FAB WELDED TOGETHER IN A COMBINATION OF THESE SIZES
(1) #8 DIAMOND 18 3/4" WIDE – CAT# 83012 AND
(1) #5 DIAMOND 11 3/4" WIDE – CAT# 53012

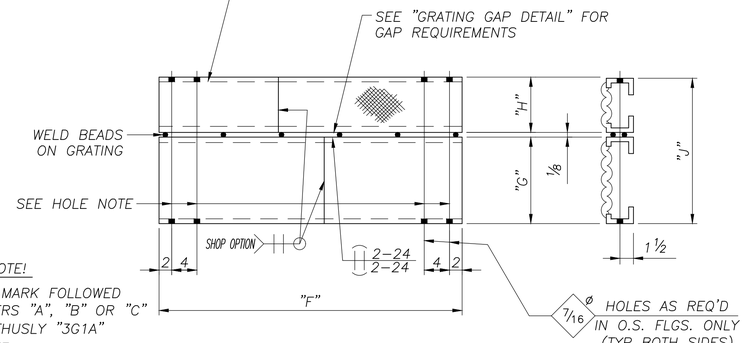


HOLE NOTE!

GRATING MARK FOLLOWED BY LETTERS "A", "B" OR "C" SHOWN THUSLY "3G1A" DESIGNATE:
"A" – NO HOLES
"B" – HOLES 1–END
"C" – HOLES BOTH ENDS

## ~ GRATING ~

(SEE CHART)

| MARK | QTY | "F" | "G" | "H" | "J" |
|---|---|---|---|---|---|
| 67G1B | 2 | 16'-0 | 1'-6 3/4 | 11 3/4 | 2'-6 5/8 |

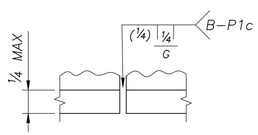


## TOE ANGLE SPLICE

( OPTIONAL )

| PARTS PER CONT | PART MARK NO | NO OF PIECES REQ'D | SECTION SYM | DESCRIPTION OF MATERIAL | LENGTH FEET | LENGTH INCHES | PARTS FOR ONE UNIT | |
|---|---|---|---|---|---|---|---|---|
| | 67M1 | 14 | | CLAMP PLATES | | | | |
| | a | 14 | PL | 1/4 x 1 1/2 | 0 | 2 1/4 | | |
| | 67M2 | 2 | | SPLICE PLATES | | | | |
| | b | 2 | PL | 1/4 x 2 1/2 | 1 | 1 1/2 | | |
| | 67M3 | 2 | | SAFETY CHAIN SUPPORT | | | | |
| | d | 2 | PL | 1/4 x 2 | 0 | 4 3/4 | | |
| | f | 2 | L | 1 1/2 x 1 1/2 x 3/16 | 3 | 0 | | |
| | 67G1B | 2 | | GRATING | | | | |
| | g | 2 | GRT | 18 3/4 WIDE | 16 | 0 | | |
| | n | 2 | GRT | 11 3/4 WIDE | 16 | 0 | | |
| | 67P1 | 7 | | HANDRAIL POSTS | | | | |
| | h | 7 | ALL | 2 1/2 x 1 1/2 x 3/16 (ALUM 6061) | 3 | 8 1/2 | | |
| | 67R1 | 6 | | HANDRAIL | | | | |
| | k | 6 | ALPI | 1.660 x .140 (ALUM 6061) | 10 | 8 | | |
| | 67A1 | 1 | | SAFETY ANGLE | | | | |
| | m | 1 | L | 4 x 3 x 1/4 | 32 | 0 | | |
| | 67L1 | 2 | | LIGHTING SUPPORTS (ALUM 6063-T6) | | | | |
| | p | 2 | ALUN | UNISTRUT 1 5/8 x 1 5/8 x .105 | 10 | 0 | | |
| | 67L2 | 2 | | LIGHTING SUPPORTS (ALUM 6063-T6) | | | | |
| | ap | 2 | ALUN | UNISTRUT 1 5/8 x 1 5/8 x .105 | 13 | 0 | | |

C3546-67

### NOTE:

SEE GENERAL NOTES DRAWING FOR MATERIAL SPECIFICATIONS, FOUNDATION AND STANDARD NOTES

REF DWG: E10

OH-30

AASHTO 6th Edition Spec's

SEALED BY:

SOUTH CAROLINA PROFESSIONAL ENGINEER
No. 38665
DAVID A LALLONE

Oct 25 2023

| NO: | REVISIONS | DATE | MADE | CHECKED |
|---|---|---|---|---|
| 0 | CHECK COMPLETE | 10/16/23 | DLK | DLJ |


walpar
A valmont COMPANY
POST OFFICE BOX 28650
BIRMINGHAM ALABAMA 35228
4200 JEFFERSON AVENUE
BIRMINGHAM ALABAMA 35221
PHONE (205)-925-4990
FAX (205) 925-7273


STATE: South Carolina
FED PROJ: Carolina Crossroads Phase 1 & 2
ST PROJ: P039718
COUNTY: Lexington & Richland
ROUTE: I-26 & I-126

SUBJECT: SIGN STRUCTURE
MISC DETAILS
FOR: Archer-United Joint Venture

DRAWN BY: DLK DATE: 10/2/23
CHECKED BY: DLJ DATE: 10/16/23
DWG NO: C3546-67

| MARK | QTY | "A" | "B" | "C" | "D" | "E" | "F" | "G" | "H" |
|---|---|---|---|---|---|---|---|---|---|
| 68C1 | 1 | 27'–1 | 23'–1 | 4'–0 | 3'–0 | 1'–3½ | 3 @ 5 = 1'–3 | 1'–5¼ | 4 @ 3¾ = 1'–3 |

| MARK | "J" | "K" | "L" | "M" | "N" QTY | "N" DIA | "P" | "S" | "T" | 1 | 2 | 3 | 4 | 5 | 6 | 7 | 8 |
|---|---|---|---|---|---|---|---|---|---|---|---|---|---|---|---|---|---|
| 68C1 | 2½ | 2 15/16 | 7½ | 5/16 | 8 | 2¼ | 2½ | 2'–6 1/16 | ¼ | a | b | d | f | k | m | n | h |

| PARTS PER CONT | PART MARK NO | NO. OF PIECES REQ'D | SECTION SYM | DESCRIPTION OF MATERIAL | LENGTH FEET | LENGTH INCHES | PARTS FOR ONE UNIT |
|---|---|---|---|---|---|---|---|
| | 68C1 | 1 | | CANTILEVER POST | | | |
| | a | 1 | PIPE | 30.000 x .375 | 27 | 0 3/16 | |
| | b | 1 | PL | 2 x 41 DIA. | – | – | |
| | d | 1 | PL | ½ x 36 | 3 | 1 | |
| | f | 1 | PL | ½ x 36 | 3 | 1 | |
| | k | 4 | PL | ½ x 2½ | 0 | 2½ | |
| | m | 4 | PL | ½ x 2 15/16 | 0 | 2 15/16 | |
| | n | 8 | PL | ½ x 7½ | 0 | 7½ | |
| | h | 8 | PL | ¾ x 5 | 1 | 0 | |
| | v1 | 1 | PIPE | 6.625 x .864 | 0 | 3 | |
| | z1 | 3 | OP | 1¼" FORGED HALF CPLG (3000#) | – | – | |

C3546–68

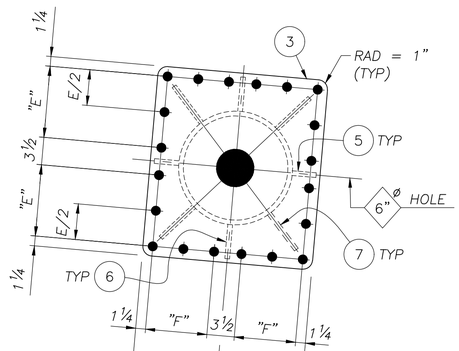


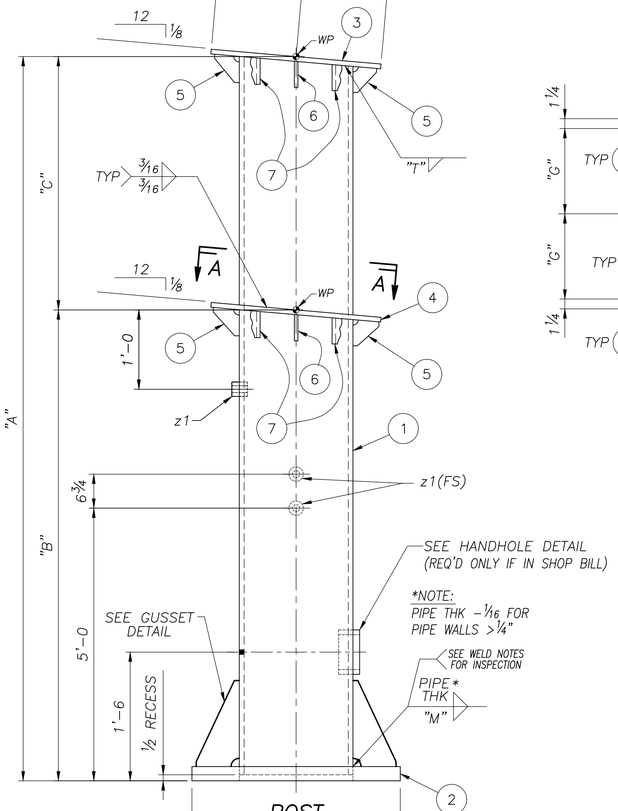


POST

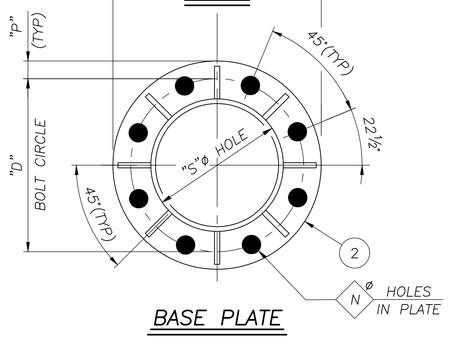


BASE PLATE

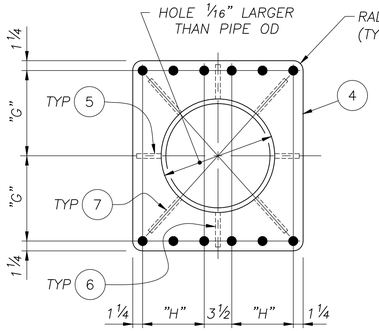


SECTION A–A

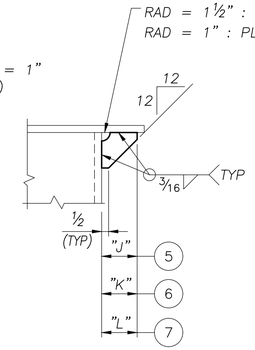


STIFFENER DETAIL

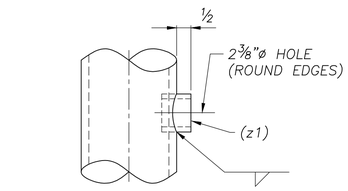


WIRE OUTLET DETAIL

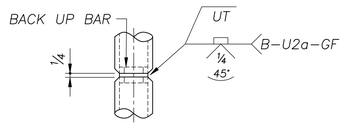


OPTIONAL SPLICE

(FOR WALL THK 5/16" OR GREATER ONLY)

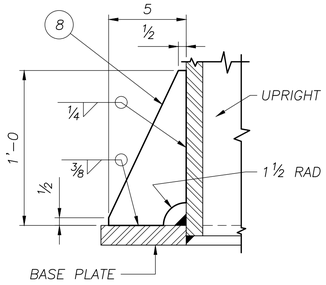


TYP GUSSET DETAIL

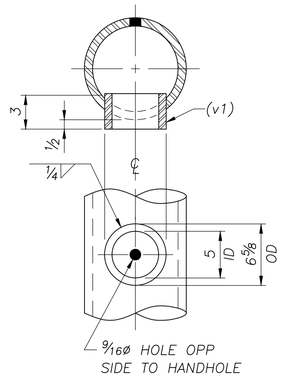


HANDHOLE DETAIL

**NOTE:**
ALL HOLES TO BE 7/8 ø UNLESS NOTED

**NOTE:**
SEE GENERAL NOTES DRAWING FOR MATERIAL SPECIFICATIONS, FOUNDATION AND STANDARD NOTES

REF DWG: E10

OH–30

AASHTO 6th Edition Spec's

SEALED BY:

SOUTH CAROLINA PROFESSIONAL ENGINEER
No. 38665
DAVID A LALLOUE

Oct 25 2023

| NO: | REVISIONS | DATE | MADE | CHECKED |
|---|---|---|---|---|
| 0 | CHECK COMPLETE | 10/16/23 | DLK | DLJ |


walpar
A valmont COMPANY
POST OFFICE BOX 28650
BIRMINGHAM ALABAMA 35228
4200 JEFFERSON AVENUE
BIRMINGHAM ALABAMA 35221
PHONE (205)–925–4990
FAX (205) 925–7273


0

CBTUPDET

STATE: South Carolina
FED PROJ: Carolina Crossroads Phase 1 & 2
ST PROJ: P039718
COUNTY: Lexington & Richland
ROUTE: I–26 & I–126

SUBJECT: CANTILEVER SIGN SUPPORT
DETAILS OF UPRIGHT

FOR: Archer–United Joint Venture

DRAWN BY: DLK DATE: 9/29/23
CHECKED BY: DLJ DATE: 10/16/23

DWG NO: C3546–68


NAME: E:\acad\JobsNPrg\3546\3546–68.dwg DATE: OCT 16, 2023 TIME: 4:31 AM dj706290

| MARK | QTY | "A" | "C" | PANELS | "D" | "E" | "F" | "G" | "H" | "J" | "K" | "L" | "M" | "N" | "P" | | | | |
|---|---|---|---|---|---|---|---|---|---|---|---|---|---|---|---|---|---|---|---|
| 69T1 | 1 | 40'–10¾ | 4'–0 | 9 @ 4'–1(±) = 36'–9¼ | 3'–6 | 1'–3½ | 3 @ 5 = 1'–3 | 2'–10½ | 4 @ 3¾ = 1'–3 | 17'–1⅛ | 3'–4½ | 3¾ | 1½ | 2½ | 4½ | | | | |

| MARK | "R" | "S" | "T" | "V" | 1 | 2 | 3 | 4 | 5 | 6 | 7 | 8 | 9 | | 11 |
|---|---|---|---|---|---|---|---|---|---|---|---|---|---|---|---|
| 69T1 | 3'–10½ | 19'–8⅝ | 36'–0¾ | ------ | a | b | d | f | g | h | k | m | n | | z1 |

| VENT HOLE SIZES | |
|---|---|
| WEB MEMBER (OD) | HOLE DIA ± ¼" |
| < 3.500 | ¾ |
| 3.500 | 1¾ |
| 4.000 | 2 |
| 4.500 | 2¼ |
| 5.563 | 2¾ |
| 6.625 | 3¼ |

| | | | | | | | | | | |
|---|---|---|---|---|---|---|---|---|---|---|
| | | | | | | | | C3546–69 | | |
| PARTS PER CONT | PART MARK NO | NO OF PIECES REQ'D | SECTION SYM | DESCRIPTION OF MATERIAL | LENGTH FEET | LENGTH INCHES | PARTS FOR ONE UNIT | | | |
| | 69T1 | 1 | | CANTILEVER TRUSS | | | | | | |
| | a | 4 | PIPE | 3.500 x .216 | 40 | 10¾ | | | | |
| | b | 20 | PIPE | 1.660 x .140 | 3 | 8 13/16 | | | | |
| | d | 18 | PIPE | 1.660 x .140 | 5 | 2 13/16 | | | | |
| | f | 3 | PIPE | 1.900 x .200 | 3 | 2 13/16 | | | | |
| | g | 18 | PIPE | 1.900 x .200 | 4 | 10 9/16 | | | | |
| | h | 4 | PIPE | 1.900 x .145 | 5 | 0 11/16 | | | | |
| | k | 1 | PL | ½ x 36 | 3 | 10½ | | | | |
| | m | 2 | PL | ½ x 7¼ | 3 | 0 | | | | |
| | n | 8 | PL | ¼ x 1½ | 0 | 3¼ | | | | |
| | z1 | 3 | OP | 1¼" FORGED HALF CPLG (3000#) | – | – | | | | |

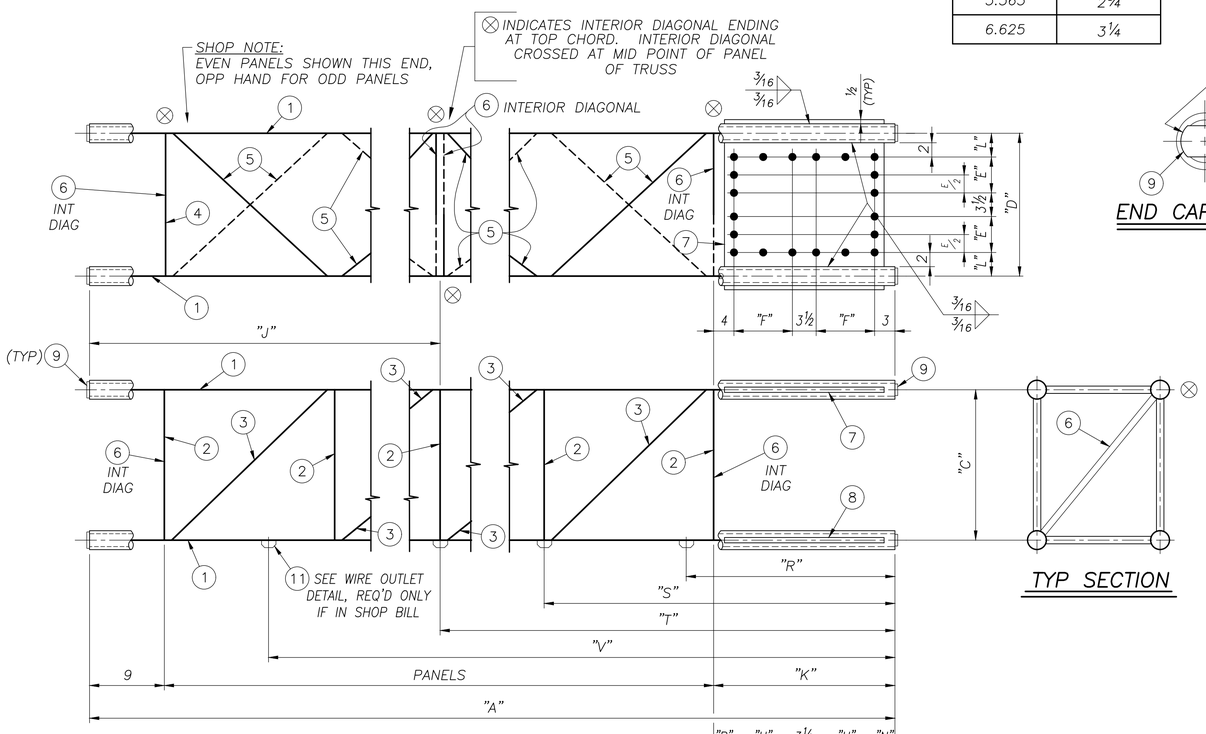


TRUSS

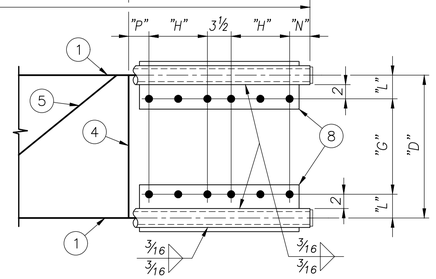





END CAP DETAIL

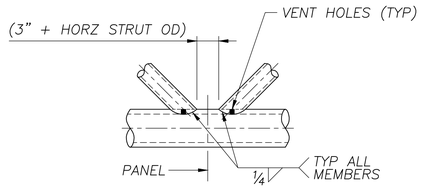


JOINT DETAIL

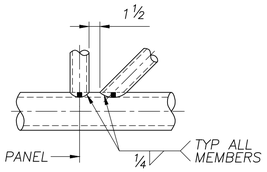


JOINT DETAIL

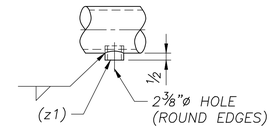


WIRE OUTLET DETAIL

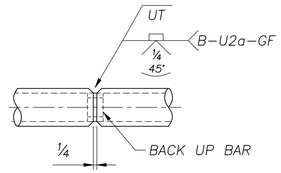


OPTIONAL CHORD SPLICE

(FOR WALL THK 5/16" OR GREATER ONLY)

TYP SECTION

SHOP NOTE:

INTERIOR DIAGONALS MAY BE OFFST UP TO 6" FROM PANEL POINTS ON TRUSS IN ORDER TO AVOID INTERSECTING WELDS IN THE AREA OF OF OTHER WEB MEMBERS.

NOTE:

ALL HOLES TO BE 7/8 ø UNLESS NOTED

NOTE:

SEE GENERAL NOTES DRAWING FOR MATERIAL SPECIFICATIONS, FOUNDATION AND STANDARD NOTES

REF DWG: E10

OH–30

AASHTO 6th Edition Spec's

SEALED BY:

SOUTH CAROLINA PROFESSIONAL ENGINEER No. 38665 DAVID A LALLONE

Oct 25 2023


walpar A valmont COMPANY

POST OFFICE BOX 28650
BIRMINGHAM ALABAMA 35228
4200 JEFFERSON AVENUE
BIRMINGHAM ALABAMA 35221
PHONE (205)–925–4990
FAX (205) 925–7273


| | |
|---|---|
| STATE: | South Carolina |
| FED PROJ: | Carolina Crossroads Phase 1 & 2 |
| ST PROJ: | P039718 |
| COUNTY: | Lexington & Richland |
| ROUTE: | I–26 & I–126 |
| SUBJECT: | CANTILEVER SIGN SUPPORT<br>DETAIL OF TRUSS |
| FOR: | Archer–United Joint Venture |
| DRAWN BY: | DLK DATE: 9/29/23 |
| CHECKED BY: | DLJ DATE: 10/16/23 |
| DWG NO: | C3546–69 |

| NO: | REVISIONS | DATE | MADE | CHECKED |
|---|---|---|---|---|
| 0 | CHECK COMPLETE | 10/16/23 | DLK | DLJ |

BTCTDET


NAME: E:\acad\JobsNPrg\3546\3546–69.dwg DATE: OCT 16, 2023 TIME: 4:30 AM dj706290

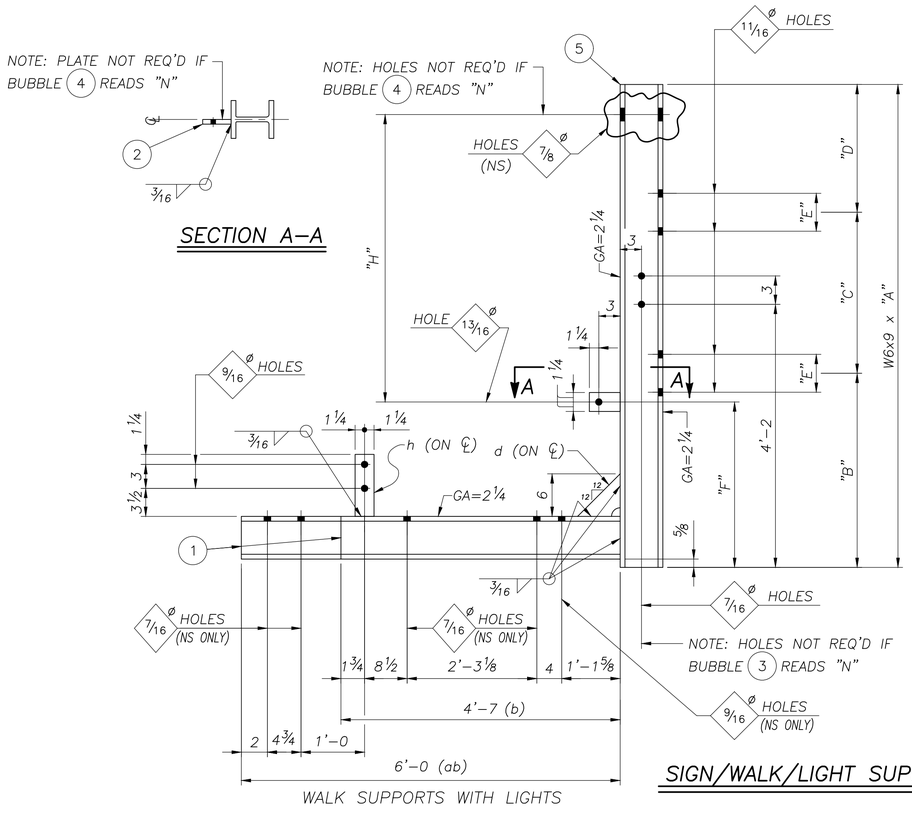


WALK SUPPORTS WITH LIGHTS

## SIGN/WALK/LIGHT SUPPORTS

| MARK | QTY | "A" | "B" | "C" | "D" | "E" | "F" | "H" | 1 | 2 | 3 | 4 | 5 |
|---|---|---|---|---|---|---|---|---|---|---|---|---|---|
| 70S1 | 1 | 9'–8 | 5'–2 | 4'–0 | 6 | 4 1/8 | ---- | ---- | b | – | Y | N | a |
| 70S2 | 2 | 9'–8 | 5'–2 | 4'–0 | 6 | 4 1/8 | ---- | ---- | b | – | N | N | aa |
| 70S3 | 2 | 12'–2 | 5'–2 | 4'–0 | 3'–0 | 4 1/8 | 2'–3 1/4 | 9'–8 | ab | f | N | Y | ba |
| 70S4 | 1 | 9'–8 | 5'–2 | 4'–0 | 6 | 4 1/8 | 2'–3 1/4 | 6'–5 | ab | f | N | Y | da |
| 70S5 | 1 | 9'–8 | 5'–2 | 4'–0 | 6 | 4 1/8 | 2'–3 1/4 | 6'–5 | ab | f | Y | Y | fa |

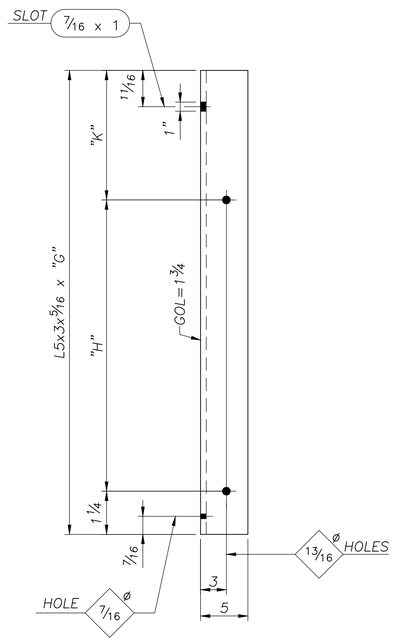


## SIGN HANGERS

| MARK | QTY | "G" | "H" | "K" |
|---|---|---|---|---|
| 70H1 | 2 | 14'–6 1/4 | 9'–8 | 4'–9 |
| 70H2 | 2 | 10'–0 1/4 | 6'–5 | 3'–6 |

| PARTS PER CONT | PART MARK NO | NO OF PIECES REQ'D | SECTION SYM | DESCRIPTION OF MATERIAL | LENGTH FEET | LENGTH INCHES | PARTS FOR ONE UNIT | |
|---|---|---|---|---|---|---|---|---|
| | 70S1 | 1 | | WALK SUPPORT | | | | |
| | a | 1 | W | 6 x 9 | 9 | 8 | | |
| | b | 1 | W | 6 x 9 | 4 | 7 | | |
| | d | 1 | PL | 1/4 x 6 | 0 | 6 | | |
| | h | 1 | PL | 1/2 x 2 1/2 | 0 | 7 3/4 | | |
| | 70S2 | 2 | | WALK SUPPORTS | | | | |
| | aa | 2 | W | 6 x 9 | 9 | 8 | | |
| | b | 2 | W | 6 x 9 | 4 | 7 | | |
| | d | 2 | PL | 1/4 x 6 | 0 | 6 | | |
| | h | 2 | PL | 1/2 x 2 1/2 | 0 | 7 3/4 | | |
| | 70S3 | 2 | | SIGN/WALK/LIGHT SUPPORTS | | | | |
| | ba | 2 | W | 6 x 9 | 12 | 2 | | |
| | ab | 2 | W | 6 x 9 | 6 | 0 | | |
| | d | 2 | PL | 1/4 x 6 | 0 | 6 | | |
| | f | 2 | PL | 3/8 x 2 1/2 | 0 | 4 1/4 | | |
| | h | 2 | PL | 1/2 x 2 1/2 | 0 | 7 3/4 | | |
| | 70S4 | 1 | | SIGN/WALK/LIGHT SUPPORT | | | | |
| | da | 1 | W | 6 x 9 | 9 | 8 | | |
| | ab | 1 | W | 6 x 9 | 6 | 0 | | |
| | d | 1 | PL | 1/4 x 6 | 0 | 6 | | |
| | f | 1 | PL | 3/8 x 2 1/2 | 0 | 4 1/4 | | |
| | h | 1 | PL | 1/2 x 2 1/2 | 0 | 7 3/4 | | |
| | 70S5 | 1 | | SIGN/WALK/LIGHT SUPPORT | | | | |
| | fa | 1 | W | 6 x 9 | 9 | 8 | | |
| | ab | 1 | W | 6 x 9 | 6 | 0 | | |
| | d | 1 | PL | 1/4 x 6 | 0 | 6 | | |
| | f | 1 | PL | 3/8 x 2 1/2 | 0 | 4 1/4 | | |
| | h | 1 | PL | 1/2 x 2 1/2 | 0 | 7 3/4 | | |
| | | | | | | | | |
| | 70H1 | 2 | | SIGN HANGERS | | | | |
| | k | 2 | L | 5 x 3 x 5/16 | 14 | 6 1/4 | | |
| | 70H2 | 2 | | SIGN HANGERS | | | | |
| | ak | 2 | L | 5 x 3 x 5/16 | 10 | 0 1/4 | | |

C3546–70

**NOTE:**
SEE GENERAL NOTES DRAWING FOR MATERIAL SPECIFICATIONS, FOUNDATION AND STANDARD NOTES

REF DWG: E10

OH–30

AASHTO 6th Edition Spec's

SEALED BY:

SOUTH CAROLINA PROFESSIONAL ENGINEER DAVID A LALLONE No. 38665

Oct 25 2023

| NO: | REVISIONS | DATE | MADE | CHECKED |
|---|---|---|---|---|
| 0 | CHECK COMPLETE | 10/16/23 | DLK | DLJ |


walpar
A valmont COMPANY
POST OFFICE BOX 28650
BIRMINGHAM ALABAMA 35228
4200 JEFFERSON AVENUE
BIRMINGHAM ALABAMA 35221
PHONE (205)–925–4990
FAX (205) 925–7273


0

STATE: South Carolina
FED PROJ: Carolina Crossroads Phase 1 & 2
ST PROJ: P039718
COUNTY: Lexington & Richland
ROUTE: I–26 & I–126

SUBJECT: SIGN SUPPORT
WALK SUPPORT & SIGN HANGER DETAILS

FOR: Archer–United Joint Venture

DRAWN BY: DLK DATE: 9/29/23
CHECKED BY: DLJ DATE: 10/16/23

DWG NO: C3546–70

SH–DET4

NAME: E:\acad\JobsNPrg\3546\3546–70.dwg DATE: OCT 16, 2023 TIME: 4:30 AM dj706290

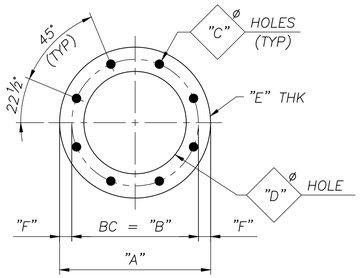


TYPE "DD"
(SEE CHART FOR INFORMATION)

## ANCHOR TEMPLATE CHART (ALL DIMENSIONS IN INCHES)

| MARK | QTY | TYPE | "A" | "B" | "C" | "D" | "E" | "F" |
|---|---|---|---|---|---|---|---|---|
| 71P1 | 2 | DD | 34 | 30 | 1⅝ | 26 | ¼ | 2 |

**NOTE:**
THREADS (ROLLED OR CUT) FOR "H" NUT

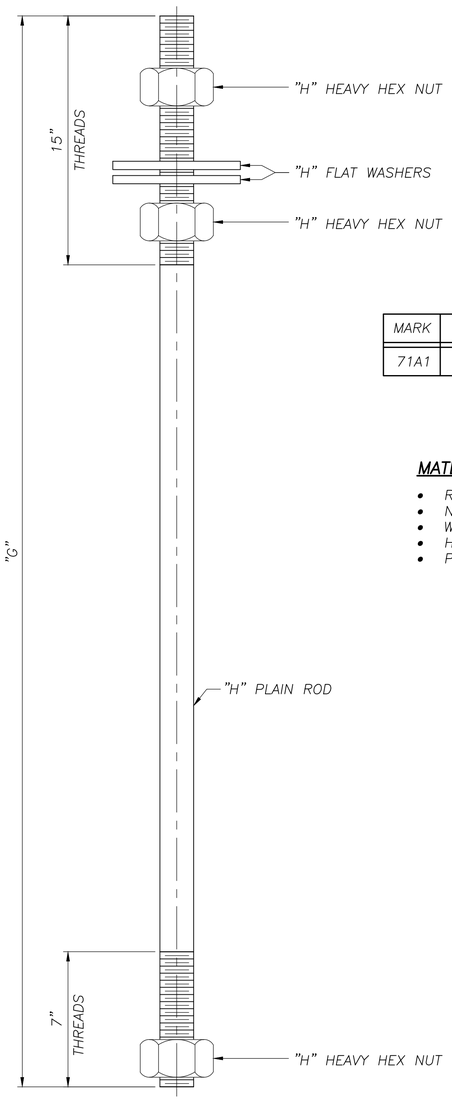


## ~ ANCHOR BOLTS ~

| MARK | "G" | "H"ø | (TPI) | ROD QTY | NUT QTY | FW QTY | |
|---|---|---|---|---|---|---|---|
| 71A1 | 4'–6 | 1½ | 6 | 8 | 24 | 16 | |

**MATERIAL SPECS:**

- RODS – ASTM F1554, GRADE 55, S1
- NUTS – ASTM A563,GR.DH OR ASTM A194,GR.2H
- WASHERS – ASTM F436
- HARDWARE – GALV PER ASTM–A153
- PLAIN ROD – GALV FULL LENGTH PER ASTM–A153

| PARTS PER CONT | PART MARK NO | NO OF PIECES REQ'D | SECTION SYM | DESCRIPTION OF MATERIAL | LENGTH FEET | LENGTH INCHES | PARTS FOR ONE UNIT | |
|---|---|---|---|---|---|---|---|---|
| | 71P1 | 2 | | ANCHOR TEMPLATES | | | | |
| | a | 2 | PL | ¼ x 34 DIA | – | – | | |

| SHIPPING LIST | | |
|---|---|---|
| QTY | MARK | DESCRIPTION |
| 2 | 71P1 | ANCHOR TEMPLATES |
| 8 | 71A1 | ANCHOR BOLTS |

NOTE: SHOP SHIP FROM THIS DRAWING

**NOTE:**
DO NOT GALVANIZE TEMPLATES

**NOTE:**
SEE GENERAL NOTES DRAWING FOR MATERIAL SPECIFICATIONS, FOUNDATION AND STANDARD NOTES

REF DWG: E11

OH–31A

AASHTO 6th Edition Spec's

SEALED BY:

SOUTH CAROLINA LICENSED PROFESSIONAL ENGINEER
No. 38665
DAVID A LALLOUE
Oct 25 2023

walpar
A valmont COMPANY
POST OFFICE BOX 28650
BIRMINGHAM ALABAMA 35228
4200 JEFFERSON AVENUE
BIRMINGHAM ALABAMA 35221
PHONE (205)–925–4990
FAX (205) 925–7273

| NO: | REVISIONS | DATE | MADE | CHECKED |
|---|---|---|---|---|
| 0 | CHECK COMPLETE | 10/16/23 | DLK | DLJ |

STATE: South Carolina
FED PROJ: Carolina Crossroads Phase 1 & 2
ST PROJ: P039718
COUNTY: Lexington & Richland
ROUTE: I–26 & I–126

SUBJECT: SIGN STRUCTURE
ANCHOR TEMPLATE & SOLE PLATE DETAILS
FOR: Archer–United Joint Venture

DRAWN BY: DLK DATE: 9/29/23
CHECKED BY: DLJ DATE: 10/16/23
DWG NO: C3546–71

C3546–72
SOUTH CAROLINA

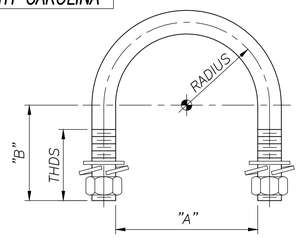


**NOTE 1:**
- UBOLT MATERIAL PROPERTIES TO MEET OR EXCEED A307
- GALV PER A153

**NOTE 2:**
- UBOLT MATERIAL PROPERTIES TO MEET OR EXCEED A307
- ZINC PL PER B633

## ~ U–BOLTS w/(2ea) HN/LW/FW ~

NUTS: ASTM A563,GR.DH OR ASTM A194,GR.2H
WASHERS: ASTM F436 & ANSI–B18.21.1

| MARK | QTY | DIA | "A" | "B" | RADIUS | THDS | MATERIAL |
|---|---|---|---|---|---|---|---|
| U1 | 8 | 5/16 | 1 11/16 | 1 5/8 | 1 | 1 1/4 | NOTE 2 |
| U3 | 16 | 1/2 | 3 5/8 | 3 3/4 | 2 1/16 | 2 | NOTE 1 |

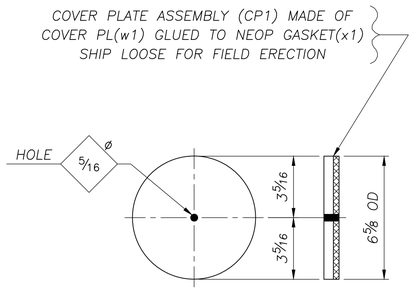


## 1 ~ COVER PLATE ASSEMBLY ~ CP1

| PART MARK NO. | NO. OF PIECES REQ'D | SECTION SYM | DESCRIPTION OF MATERIAL | LENGTH FEET | LENGTH INCHES | PARTS FOR ONE UNIT |
|---|---|---|---|---|---|---|
| CP1 | 1 | | COVER PLATE ASSEMBLY | | | |
| w1 | 1 | PL | 1/4 x 6 5/8 DIA. (GALV A123) | – | – | 1 |
| x1 | 1 | OP | 1/8 x 6 5/8 DIA. (NEOP GASKET) | – | – | 1 |

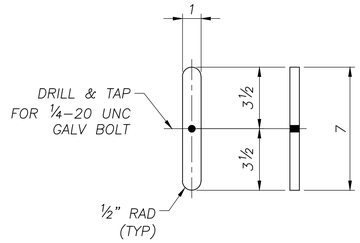


## 1 ~ HANDHOLE BAR ~ HB1

| PART MARK NO. | NO. OF PIECES REQ'D | SECTION SYM | DESCRIPTION OF MATERIAL | LENGTH FEET | LENGTH INCHES | PARTS FOR ONE UNIT |
|---|---|---|---|---|---|---|
| HB1 | 1 | | HANDHOLE BAR | | | |
| w2 | 1 | PL | 1/4 x 1 (GALV A123) | 0 | 7 | 1 |

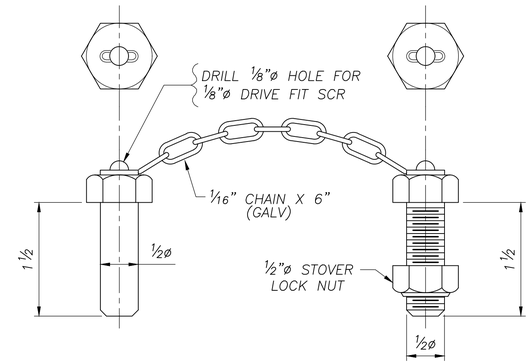


## 4 ~ HINGE PIN ASSEMBLY ~ 72P1

MAT'L SPECS: ASTM A307 (ZINC PL UN)

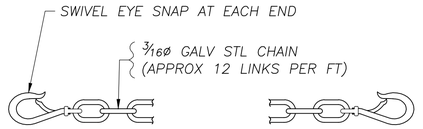


## ~ SAFETY CHAIN ~

| MARK | QTY | LENGTH |
|---|---|---|
| 72S1 | 2 | 4'–6 |

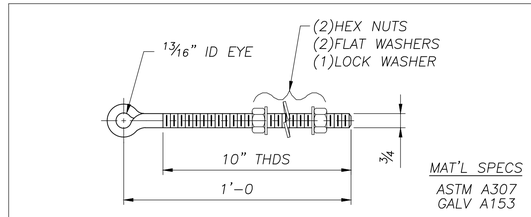


MAT'L SPECS
ASTM A307
GALV A153

## 2 ~ EYE BOLT ASSEMBLY ~ 72M1

NUTS: ASTM A563,GR.DH OR ASTM A194,GR.2H
WASHERS: ASTM F436 & ANSI–B18.21.1

**NOTE:**
SEE GENERAL NOTES DRAWING FOR MATERIAL SPECIFICATIONS, FOUNDATION AND STANDARD NOTES

REF DWGS: E11

OH–31A

AASHTO 6th Edition Spec's

SEALED BY:

SOUTH CAROLINA PROFESSIONAL ENGINEER
No. 38665
DAVID A LALLONE
Oct 25 2023

walpar
A valmont COMPANY
POST OFFICE BOX 28650
BIRMINGHAM ALABAMA 35228
4200 JEFFERSON AVENUE
BIRMINGHAM ALABAMA 35221
PHONE (205)–925–4990
FAX (205) 925–7273

| | |
|---|---|
| STATE: | South Carolina |
| FED PROJ: | Carolina Crossroads Phase 1 & 2 |
| ST PROJ: | P039718 |
| COUNTY: | Lexington & Richland |
| ROUTE: | I–26 & I–126 |
| SUBJECT: | SIGN STRUCTURES |
| | MISC DETAILS |
| FOR: | Archer–United Joint Venture |
| DRAWN BY: | DLK DATE: 9/29/23 |
| CHECKED BY: | DLJ DATE: 10/16/23 |
| DWG NO: | C3546–72 |

| NO: | REVISIONS | DATE | MADE | CHECKED |
|---|---|---|---|---|
| 0 | CHECK COMPLETE | 10/16/23 | DLK | DLJ |

KITDWG3

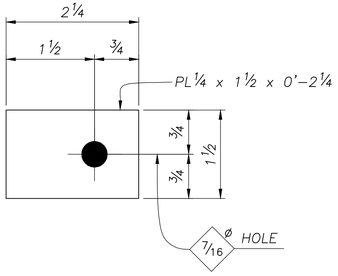


## 8 ~ CLAMP PLATES ~ 73M1

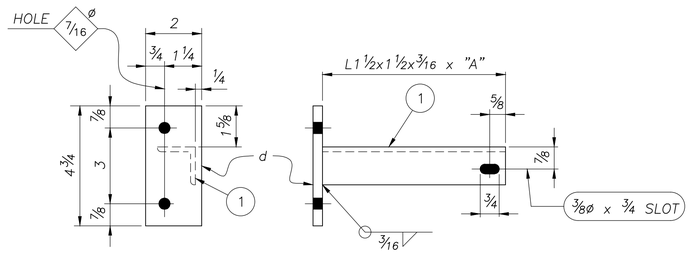


## ~ SAFETY CHAIN SUPPORT ~

(SEE CHART)

| MARK | QTY | "A" | (1) |
|---|---|---|---|
| 73M3 | 2 | 3'-0 | f |

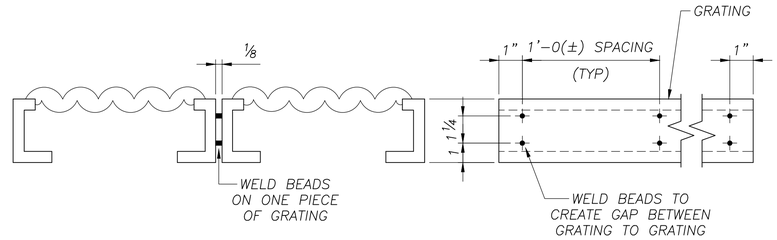


## GRATING GAP DETAIL

| | | | | | | C3546-73 | | | |
|---|---|---|---|---|---|---|---|---|---|
| PARTS PER CONT | PART MARK NO | NO OF PIECES REQ'D | SECTION SYM | DESCRIPTION OF MATERIAL | LENGTH FEET | LENGTH INCHES | PARTS FOR ONE UNIT | |
| | 73M1 | 8 | | CLAMP PLATES | | | | |
| | a | 8 | PL | 1/4 x 1 1/2 | 0 | 2 1/4 | | |
| | 73M3 | 2 | | SAFETY CHAIN SUPPORT | | | | |
| | d | 2 | PL | 1/4 x 2 | 0 | 4 3/4 | | |
| | f | 2 | L | 1 1/2 x 1 1/2 x 3/16 | 3 | 0 | | |
| | 73G1A | 1 | | GRATING | | | | |
| | g | 1 | GRT | 18 3/4 WIDE | 18 | 0 | | |
| | n | 1 | GRT | 11 3/4 WIDE | 18 | 0 | | |
| | 73P1 | 4 | | HANDRAIL POSTS | | | | |
| | h | 4 | ALL | 2 1/2 x 1 1/2 x 3/16 (ALUM 6061) | 3 | 8 1/2 | | |
| | 73R1 | 4 | | HANDRAIL | | | | |
| | k | 4 | ALPI | 1.660 x .140 (ALUM 6061) | 9 | 0 | | |
| | 73A1 | 1 | | SAFETY ANGLE | | | | |
| | m | 1 | L | 4 x 3 x 1/4 | 18 | 0 | | |
| | 73L1 | 2 | | LIGHTING SUPPORTS (ALUM 6063-T6) | | | | |
| | p | 2 | ALUN | UNISTRUT 1 5/8 x 1 5/8 x .105 | 14 | 0 | | |

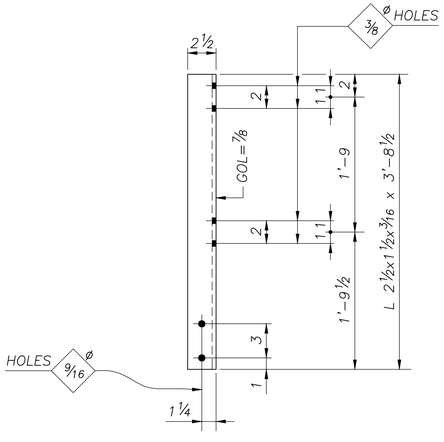


## 4 ~ HANDRAIL POSTS ~ 73P1

(ALUMINUM)

### SHOP NOTE:

GRATING TO BE "GRIP STRUT", OR EQUAL SAFETY GRATING 3" DEEP, FORMED FROM 12 GA SHEETS GALV AFTER FAB WELDED TOGETHER IN A COMBINATION OF THESE SIZES
(1) #8 DIAMOND 18 3/4" WIDE – CAT# 83012 AND
(1) #5 DIAMOND 11 3/4" WIDE – CAT# 53012

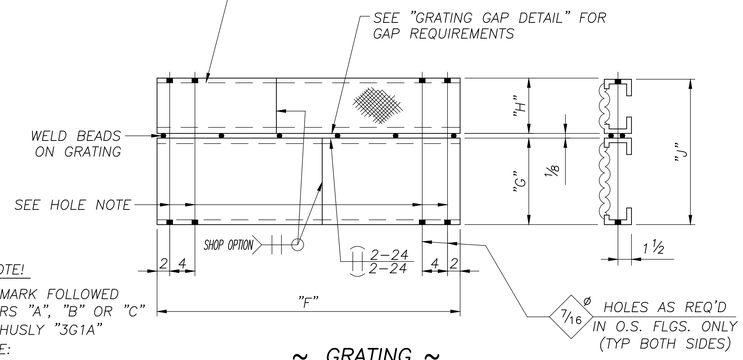


HOLE NOTE!

GRATING MARK FOLLOWED BY LETTERS "A", "B" OR "C" SHOWN THUSLY "3G1A" DESIGNATE:
"A" – NO HOLES
"B" – HOLES 1-END
"C" – HOLES BOTH ENDS

## ~ GRATING ~

(SEE CHART)

| MARK | QTY | "F" | "G" | "H" | "J" |
|---|---|---|---|---|---|
| 73G1A | 1 | 18'-0 | 1'-6 3/4 | 11 3/4 | 2'-6 5/8 |

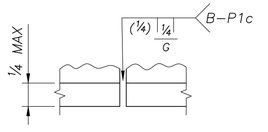


## TOE ANGLE SPLICE

( OPTIONAL )

### NOTE:

SEE GENERAL NOTES DRAWING FOR MATERIAL SPECIFICATIONS, FOUNDATION AND STANDARD NOTES

REF DWG: E11

OH-31A

AASHTO 6th Edition Spec's

SEALED BY:

SOUTH CAROLINA PROFESSIONAL ENGINEER
No. 38665
DAVID A LALLONE

Oct 25 2023

| NO: | REVISIONS | DATE | MADE | CHECKED |
|---|---|---|---|---|
| 0 | CHECK COMPLETE | 10/16/23 | DLK | DLJ |


walpar
A valmont COMPANY
POST OFFICE BOX 28650
BIRMINGHAM ALABAMA 35228
4200 JEFFERSON AVENUE
BIRMINGHAM ALABAMA 35221
PHONE (205)-925-4990
FAX (205) 925-7273


0

| | |
|---|---|
| STATE: | South Carolina |
| FED PROJ: | Carolina Crossroads Phase 1 & 2 |
| ST PROJ: | P039718 |
| COUNTY: | Lexington & Richland |
| ROUTE: | I-26 & I-126 |
| SUBJECT: | SIGN STRUCTURE |
| | MISC DETAILS |
| FOR: | Archer-United Joint Venture |
| DRAWN BY: | DLK DATE: 10/2/23 |
| CHECKED BY: | DLJ DATE: 10/16/23 |
| DWG NO: | C3546-73 |

| MARK | QTY | "A" | "B" | "C" | "D" | "E" | "F" | "G" | "H" |
|---|---|---|---|---|---|---|---|---|---|
| 74C1 | 1 | 25'–4 | 21'–10 | 3'–6 | 2'–6 | 1'–0½ | 2 @ 6 = 1'–0 | 1'–2¼ | 2 @ 6 = 1'–0 |

| MARK | "J" | "K" | "L" | "M" | "N" QTY | "N" DIA | "P" | "S" | "T" | 1 | 2 | 3 | 4 | 5 | 6 | 7 | 8 |
|---|---|---|---|---|---|---|---|---|---|---|---|---|---|---|---|---|---|
| 74C1 | 2½ | 2 15/16 | 6¼ | 5/16 | 8 | 1¾ | 2½ | 2'–0 1/16 | ¼ | a | b | d | f | k | m | n | h |

| PARTS PER CONT | PART MARK NO | NO. OF PIECES REQ'D | SECTION SYM | DESCRIPTION OF MATERIAL | LENGTH FEET | LENGTH INCHES | PARTS FOR ONE UNIT |
|---|---|---|---|---|---|---|---|
| | 74C1 | 1 | | CANTILEVER POST | | | |
| | a | 1 | PIPE | 24.000 x .375 | 25 | 3⅛ | |
| | b | 1 | PL | 1½ x 35 DIA. | – | – | |
| | d | 1 | PL | ½ x 30 | 2 | 7 | |
| | f | 1 | PL | ½ x 30 | 2 | 7 | |
| | k | 4 | PL | ½ x 2½ | 0 | 2½ | |
| | m | 4 | PL | ½ x 2 15/16 | 0 | 2 15/16 | |
| | n | 8 | PL | ½ x 6¼ | 0 | 6¼ | |
| | h | 8 | PL | ½ x 5 | 1 | 0 | |
| | v1 | 1 | PIPE | 6.625 x .864 | 0 | 3 | |
| | z1 | 3 | OP | 1¼" FORGED HALF CPLG (3000#) | – | – | |

C3546–74

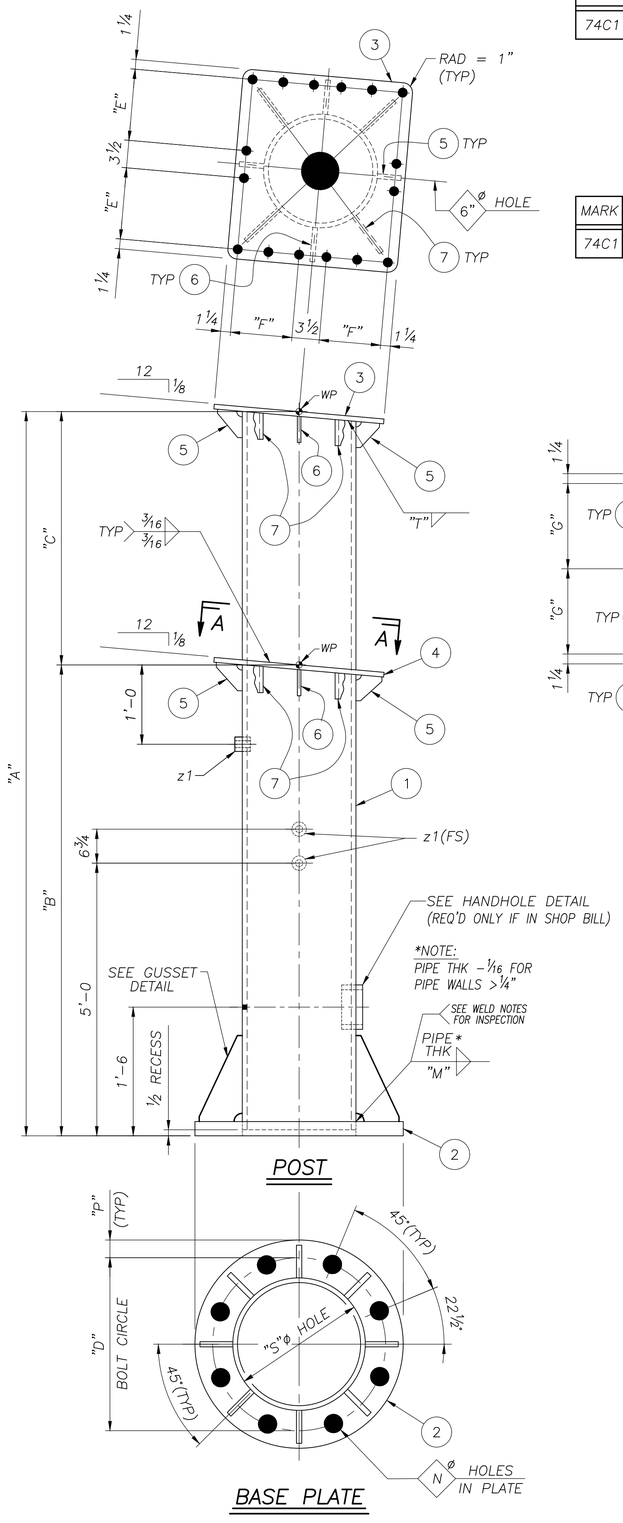


POST




BASE PLATE

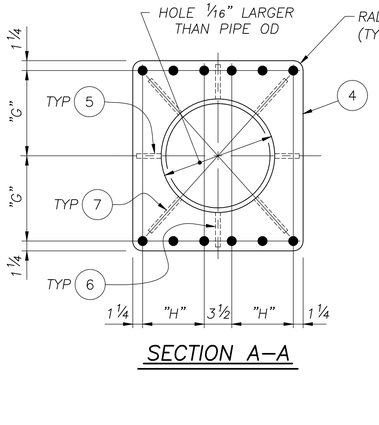


SECTION A–A

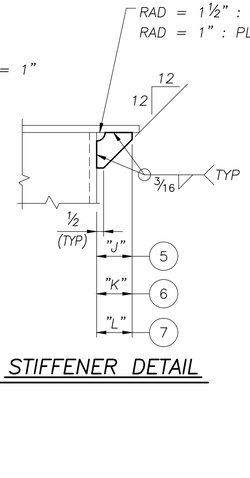


STIFFENER DETAIL

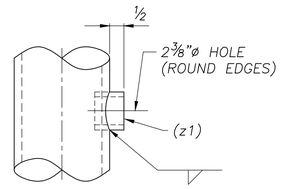


WIRE OUTLET DETAIL

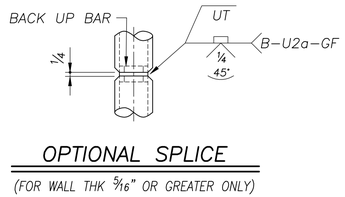


OPTIONAL SPLICE

(FOR WALL THK 5/16" OR GREATER ONLY)

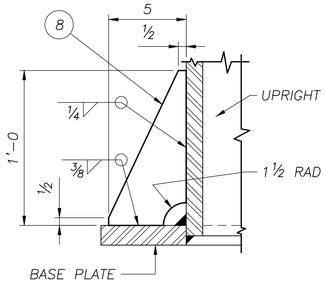


TYP GUSSET DETAIL

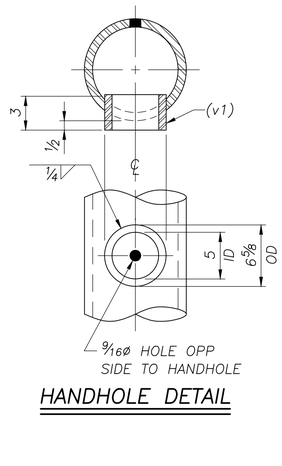


HANDHOLE DETAIL

**NOTE:**
ALL HOLES TO BE ⅞ ø UNLESS NOTED

**NOTE:**
SEE GENERAL NOTES DRAWING FOR MATERIAL SPECIFICATIONS, FOUNDATION AND STANDARD NOTES

REF DWG: E11

OH–31A

AASHTO 6th Edition Spec's

SEALED BY:

SOUTH CAROLINA PROFESSIONAL ENGINEER
No. 38665
DAVID A LALLOUE

Oct 25 2023

| NO: | REVISIONS | DATE | MADE | CHECKED |
|---|---|---|---|---|
| 0 | CHECK COMPLETE | 10/16/23 | DLK | DLJ |

walpar
A valmont COMPANY


POST OFFICE BOX 28650
BIRMINGHAM ALABAMA 35228
4200 JEFFERSON AVENUE
BIRMINGHAM ALABAMA 35221
PHONE (205)–925–4990
FAX (205) 925–7273


0

CBTUPDET

| | |
|---|---|
| STATE: | South Carolina |
| FED PROJ: | Carolina Crossroads Phase 1 & 2 |
| ST PROJ: | P039718 |
| COUNTY: | Lexington & Richland |
| ROUTE: | I–26 & I–126 |
| SUBJECT: | CANTILEVER SIGN SUPPORT DETAILS OF UPRIGHT |
| FOR: | Archer–United Joint Venture |
| DRAWN BY: | DLK DATE: 9/29/23 |
| CHECKED BY: | DLJ DATE: 10/16/23 |
| DWG NO: | C3546–74 |


NAME: E:\acad\JobsNPrg\3546\3546–74.dwg DATE: OCT 16, 2023 TIME: 4:29 AM dj706290

| MARK | QTY | "A" | "C" | PANELS | "D" | "E" | "F" | "G" | "H" | "J" | "K" | "L" | "M" | "N" | "P" | | | | |
|---|---|---|---|---|---|---|---|---|---|---|---|---|---|---|---|---|---|---|---|
| 75T1 | 1 | 34'–1¾ | 3'–6 | 8 @ 3'–9⅞(±) = 30'–7¼ | 3'–0 | 1'–0½ | 2 @ 6 = 1'–0 | 2'–4½ | 2 @ 6 = 1'–0 | 16'–0⅝ | 2'–9½ | 3¾ | 1½ | 2 9/16 | 3 7/16 | | | | |

| MARK | "R" | "S" | "T" | "V" | 1 | 2 | 3 | 4 | 5 | 6 | 7 | 8 | 9 | | 11 |
|---|---|---|---|---|---|---|---|---|---|---|---|---|---|---|---|
| 75T1 | 3'–3½ | 29'–6 13/16 | ------- | ------- | a | b | d | f | g | h | k | m | n | | z1 |

| VENT HOLE SIZES | |
|---|---|
| WEB MEMBER (OD) | HOLE DIA ± ¼" |
| < 3.500 | ¾ |
| 3.500 | 1¾ |
| 4.000 | 2 |
| 4.500 | 2¼ |
| 5.563 | 2¾ |
| 6.625 | 3¼ |

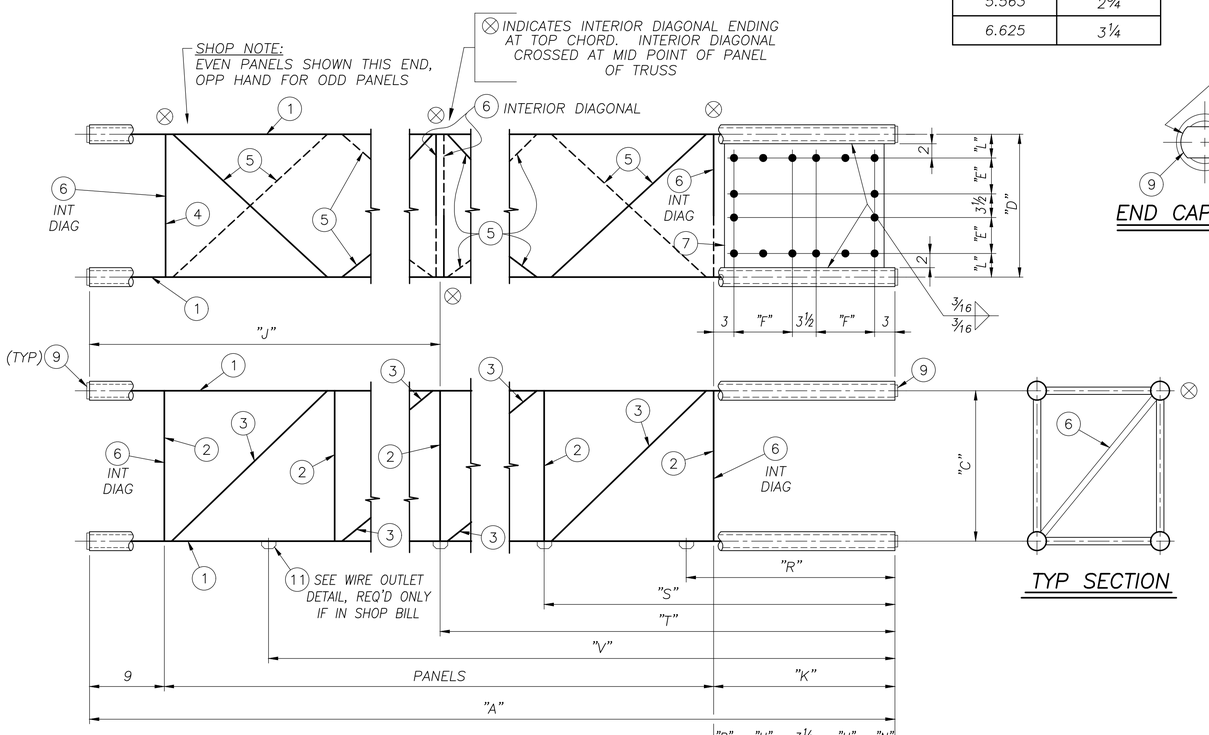


TRUSS

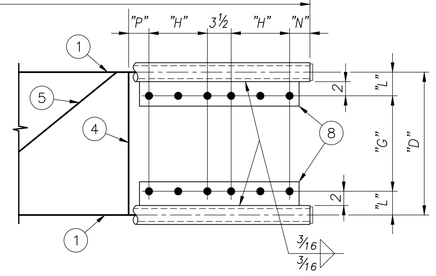





END CAP DETAIL

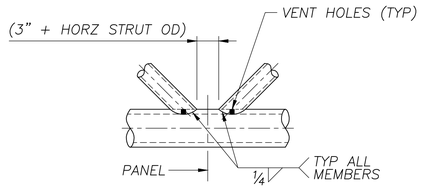


JOINT DETAIL

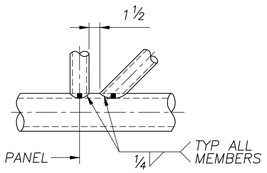


JOINT DETAIL

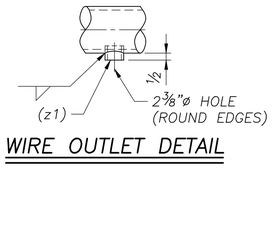


WIRE OUTLET DETAIL

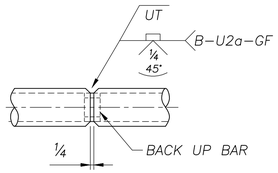


OPTIONAL CHORD SPLICE

(FOR WALL THK 5/16" OR GREATER ONLY)

SHOP NOTE:

INTERIOR DIAGONALS MAY BE OFFST UP TO 6" FROM PANEL POINTS ON TRUSS IN ORDER TO AVOID INTERSECTING WELDS IN THE AREA OF OF OTHER WEB MEMBERS.

NOTE:

ALL HOLES TO BE 7/8 ø UNLESS NOTED

NOTE:

SEE GENERAL NOTES DRAWING FOR MATERIAL SPECIFICATIONS, FOUNDATION AND STANDARD NOTES

REF DWG: E11

AASHTO 6th Edition Spec's

OH–31A

C3546–75

| PARTS PER CONT | PART MARK NO | NO OF PIECES REQ'D | SECTION SYM | DESCRIPTION OF MATERIAL | LENGTH FEET | LENGTH INCHES | PARTS FOR ONE UNIT | |
|---|---|---|---|---|---|---|---|---|
| | 75T1 | 1 | | CANTILEVER TRUSS | | | | |
| | a | 4 | PIPE | 3.500 x .188 | 34 | 1¾ | | |
| | b | 18 | PIPE | 1.315 x .133 | 3 | 2 11/16 | | |
| | d | 16 | PIPE | 1.315 x .133 | 4 | 8 11/16 | | |
| | f | 3 | PIPE | 1.660 x .140 | 2 | 8 13/16 | | |
| | g | 16 | PIPE | 1.660 x .140 | 4 | 4½ | | |
| | h | 4 | PIPE | 1.315 x .133 | 4 | 4 | | |
| | k | 1 | PL | ½ x 30 | 2 | 8½ | | |
| | m | 2 | PL | ½ x 3¼ | 2 | 6 | | |
| | n | 8 | PL | ¼ x 1½ | 0 | 3¼ | | |
| | z1 | 2 | OP | 1¼" FORGED HALF CPLG (3000#) | – | – | | |

SEALED BY:

SOUTH CAROLINA PROFESSIONAL ENGINEER
No. 38665
DAVID A LALLONE

Oct 25 2023

| NO: | REVISIONS | DATE | MADE | CHECKED |
|---|---|---|---|---|
| 0 | CHECK COMPLETE | 10/16/23 | DLK | DLJ |


walpar
A valmont COMPANY
POST OFFICE BOX 28650
BIRMINGHAM ALABAMA 35228
4200 JEFFERSON AVENUE
BIRMINGHAM ALABAMA 35221
PHONE (205)–925–4990
FAX (205) 925–7273


0

| | |
|---|---|
| STATE: | South Carolina |
| FED PROJ: | Carolina Crossroads Phase 1 & 2 |
| ST PROJ: | P039718 |
| COUNTY: | Lexington & Richland |
| ROUTE: | I–26 & I–126 |
| SUBJECT: | CANTILEVER SIGN SUPPORT |
| | DETAIL OF TRUSS |
| FOR: | Archer–United Joint Venture |
| DRAWN BY: | DLK DATE: 9/29/23 |
| CHECKED BY: | DLJ DATE: 10/16/23 |
| DWG NO: | C3546–75 |

BTCTDET


NAME: E:\acad\JobsNProg\3546\3546–75.dwg DATE: OCT 16, 2023 TIME: 4:29 AM dj706290

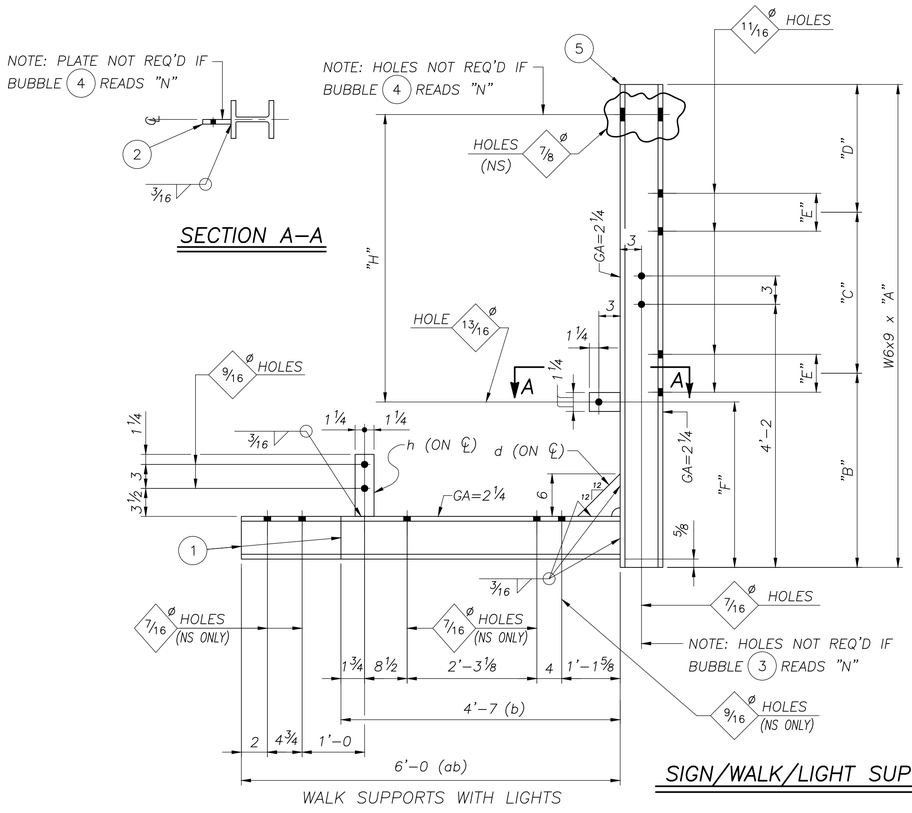


WALK SUPPORTS WITH LIGHTS

## SIGN/WALK/LIGHT SUPPORTS

| MARK | QTY | "A" | "B" | "C" | "D" | "E" | "F" | "H" | 1 | 2 | 3 | 4 | 5 |
|---|---|---|---|---|---|---|---|---|---|---|---|---|---|
| 76S1 | 1 | 8'–5 | 4'–5 | 3'–6 | 6 | 4 1/8 | ---- | ---- | b | – | Y | N | a |
| 76S2 | 1 | 8'–5 | 4'–5 | 3'–6 | 6 | 4 1/8 | ---- | ---- | b | – | N | N | aa |
| 76S3 | 1 | 8'–5 | 4'–5 | 3'–6 | 6 | 4 1/8 | 2'–3 1/4 | 5'–2 1/2 | ab | f | N | Y | ba |
| 76S4 | 1 | 8'–5 | 4'–5 | 3'–6 | 6 | 4 1/8 | 2'–3 1/4 | 5'–2 1/2 | ab | f | Y | Y | da |

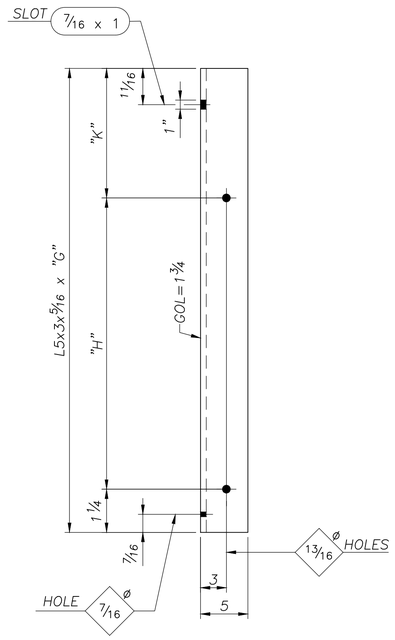


## SIGN HANGERS

| MARK | QTY | "G" | "H" | "K" |
|---|---|---|---|---|
| 76H1 | 2 | 8'–0 1/4 | 5'–2 1/2 | 2'–8 1/2 |

| PARTS PER CONT | PART MARK NO | NO OF PIECES REQ'D | SECTION SYM | DESCRIPTION OF MATERIAL | LENGTH FEET | LENGTH INCHES | PARTS FOR ONE UNIT | |
|---|---|---|---|---|---|---|---|---|
| | 76S1 | 1 | | WALK SUPPORT | | | | |
| | a | 1 | W | 6 x 9 | 8 | 5 | | |
| | b | 1 | W | 6 x 9 | 4 | 7 | | |
| | d | 1 | PL | 1/4 x 6 | 0 | 6 | | |
| | h | 1 | PL | 1/2 x 2 1/2 | 0 | 7 3/4 | | |
| | 76S2 | 1 | | WALK SUPPORT | | | | |
| | aa | 1 | W | 6 x 9 | 8 | 5 | | |
| | b | 1 | W | 6 x 9 | 4 | 7 | | |
| | d | 1 | PL | 1/4 x 6 | 0 | 6 | | |
| | h | 1 | PL | 1/2 x 2 1/2 | 0 | 7 3/4 | | |
| | 76S3 | 1 | | SIGN/WALK/LIGHT SUPPORT | | | | |
| | ba | 1 | W | 6 x 9 | 8 | 5 | | |
| | ab | 1 | W | 6 x 9 | 6 | 0 | | |
| | d | 1 | PL | 1/4 x 6 | 0 | 6 | | |
| | f | 1 | PL | 3/8 x 2 1/2 | 0 | 4 1/4 | | |
| | h | 1 | PL | 1/2 x 2 1/2 | 0 | 7 3/4 | | |
| | 76S4 | 1 | | SIGN/WALK/LIGHT SUPPORT | | | | |
| | da | 1 | W | 6 x 9 | 8 | 5 | | |
| | ab | 1 | W | 6 x 9 | 6 | 0 | | |
| | d | 1 | PL | 1/4 x 6 | 0 | 6 | | |
| | f | 1 | PL | 3/8 x 2 1/2 | 0 | 4 1/4 | | |
| | h | 1 | PL | 1/2 x 2 1/2 | 0 | 7 3/4 | | |
| | | | | | | | | |
| | 76H1 | 2 | | SIGN HANGERS | | | | |
| | k | 2 | L | 5 x 3 x 5/16 | 8 | 0 1/4 | | |
| | | | | | | | | |

C3546–76

**NOTE:**
SEE GENERAL NOTES DRAWING FOR MATERIAL SPECIFICATIONS, FOUNDATION AND STANDARD NOTES

REF DWG: E11

OH–31A

AASHTO 6th Edition Spec's

SEALED BY:

SOUTH CAROLINA PROFESSIONAL ENGINEER
No. 38665
DAVID A LALLONE
Oct 25 2023

| NO: | REVISIONS | DATE | MADE | CHECKED |
|---|---|---|---|---|
| 0 | CHECK COMPLETE | 10/16/23 | DLK | DLJ |


walpar
A valmont COMPANY
POST OFFICE BOX 28650
BIRMINGHAM ALABAMA 35228
4200 JEFFERSON AVENUE
BIRMINGHAM ALABAMA 35221
PHONE (205)–925–4990
FAX (205) 925–7273


STATE: South Carolina
FED PROJ: Carolina Crossroads Phase 1 & 2
ST PROJ: P039718
COUNTY: Lexington & Richland
ROUTE: I–26 & I–126

SUBJECT: SIGN SUPPORT
WALK SUPPORT & SIGN HANGER DETAILS

FOR: Archer–United Joint Venture

DRAWN BY: DLK DATE: 9/29/23
CHECKED BY: DLJ DATE: 10/16/23

DWG NO: C3546–76

SH–DET4

NAME: E:\acad\JobsNProg\3546\3546–76.dwg DATE: OCT 16, 2023 TIME: 4:28 AM dj706290

C3546–77
SOUTH CAROLINA

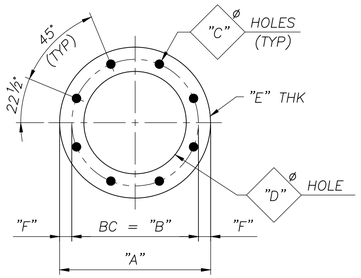


TYPE "DD"
(SEE CHART FOR INFORMATION)

## ANCHOR TEMPLATE CHART (ALL DIMENSIONS IN INCHES)

| MARK | QTY | TYPE | "A" | "B" | "C" | "D" | "E" | "F" |
|---|---|---|---|---|---|---|---|---|
| 77P1 | 2 | DD | 34 | 30 | 1⅝ | 26 | ¼ | 2 |

**NOTE:**
THREADS (ROLLED OR CUT) FOR "H" NUT

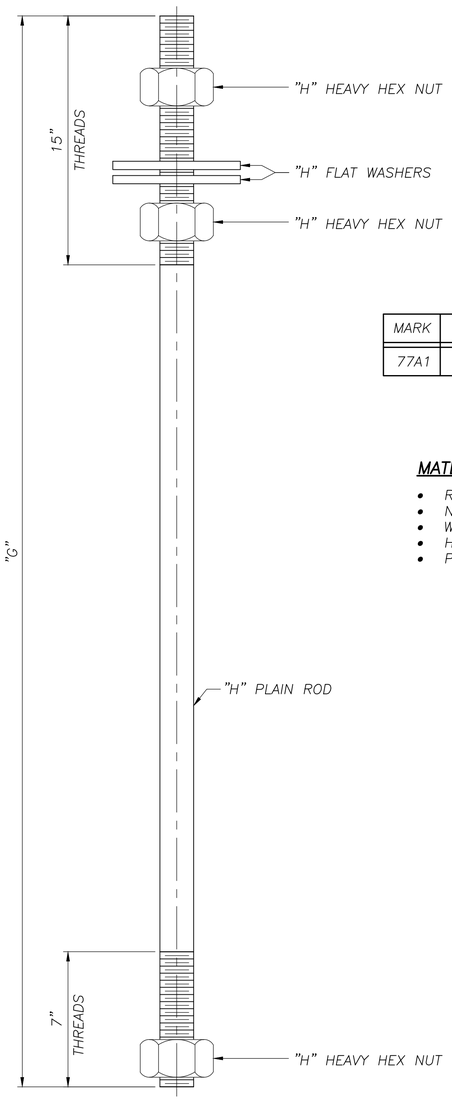


## ~ ANCHOR BOLTS ~

| MARK | "G" | "H"ø | (TPI) | ROD QTY | NUT QTY | FW QTY | |
|---|---|---|---|---|---|---|---|
| 77A1 | 4'–6 | 1½ | 6 | 8 | 24 | 16 | |

**MATERIAL SPECS:**

- RODS – ASTM F1554, GRADE 55, S1
- NUTS – ASTM A563,GR.DH OR ASTM A194,GR.2H
- WASHERS – ASTM F436
- HARDWARE – GALV PER ASTM–A153
- PLAIN ROD – GALV FULL LENGTH PER ASTM–A153

C3546–77

| PARTS PER CONT | PART MARK NO | NO OF PIECES REQ'D | SECTION SYM | DESCRIPTION OF MATERIAL | LENGTH FEET | LENGTH INCHES | PARTS FOR ONE UNIT | |
|---|---|---|---|---|---|---|---|---|
| | 77P1 | 2 | | ANCHOR TEMPLATES | | | | |
| | a | 2 | PL | ¼ x 34 DIA | – | – | | |

| SHIPPING LIST | | |
|---|---|---|
| QTY | MARK | DESCRIPTION |
| 2 | 77P1 | ANCHOR TEMPLATES |
| 8 | 77A1 | ANCHOR BOLTS |

## NOTE: SHOP SHIP FROM THIS DRAWING

**NOTE:**
DO NOT GALVANIZE TEMPLATES

**NOTE:**
SEE GENERAL NOTES DRAWING FOR MATERIAL SPECIFICATIONS, FOUNDATION AND STANDARD NOTES

REF DWG: E12

OH–31B

AASHTO 6th Edition Spec's

SEALED BY:

SOUTH CAROLINA LICENSED PROFESSIONAL ENGINEER
No. 38665
DAVID A LALLOUE
Oct 25 2023

| NO: | REVISIONS | DATE | MADE | CHECKED |
|---|---|---|---|---|
| 0 | CHECK COMPLETE | 10/16/23 | DLK | DLJ |


walpar
A valmont COMPANY
POST OFFICE BOX 28650
BIRMINGHAM ALABAMA 35228
4200 JEFFERSON AVENUE
BIRMINGHAM ALABAMA 35221
PHONE (205)–925–4990
FAX (205) 925–7273


0

STATE: South Carolina
FED PROJ: Carolina Crossroads Phase 1 & 2
ST PROJ: P039718
COUNTY: Lexington & Richland
ROUTE: I–26 & I–126

SUBJECT: SIGN STRUCTURE
ANCHOR TEMPLATE & SOLE PLATE DETAILS
FOR: Archer–United Joint Venture

DRAWN BY: DLK DATE: 10/2/23
CHECKED BY: DLJ DATE: 10/16/23
DWG NO: C3546–77

ABAT_TEMP


NAME: E:\acad\JobsNProg\3546\3546–77.dwg DATE: OCT 16, 2023 TIME: 4:28 AM djf06290

C3546–78
SOUTH CAROLINA

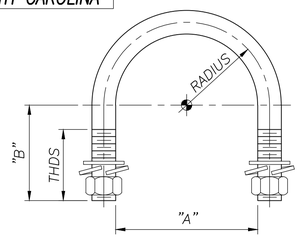


**NOTE 1:**
- UBOLT MATERIAL PROPERTIES TO MEET OR EXCEED A307
- GALV PER A153

**NOTE 2:**
- UBOLT MATERIAL PROPERTIES TO MEET OR EXCEED A307
- ZINC PL PER B633

## ~ U–BOLTS w/(2ea) HN/LW/FW ~

NUTS: ASTM A563,GR.DH OR ASTM A194,GR.2H
WASHERS: ASTM F436 & ANSI–B18.21.1

| MARK | QTY | DIA | "A" | "B" | RADIUS | THDS | MATERIAL |
|---|---|---|---|---|---|---|---|
| U1 | 8 | 5/16 | 1 11/16 | 1 5/8 | 1 | 1 1/4 | NOTE 2 |
| U3 | 16 | 1/2 | 3 5/8 | 3 3/4 | 2 1/16 | 2 | NOTE 1 |

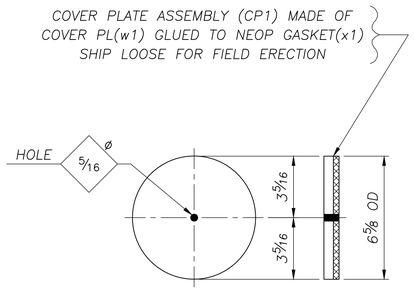


## 1 ~ COVER PLATE ASSEMBLY ~ CP1

| PART MARK NO. | NO. OF PIECES REQ'D. | SECTION SYM | DESCRIPTION OF MATERIAL | LENGTH FEET | LENGTH INCHES | PARTS FOR ONE UNIT |
|---|---|---|---|---|---|---|
| CP1 | 1 | | COVER PLATE ASSEMBLY | | | |
| w1 | 1 | PL | 1/4 x 6 5/8 DIA. (GALV A123) | – | – | 1 |
| x1 | 1 | OP | 1/8 x 6 5/8 DIA. (NEOP GASKET) | – | – | 1 |

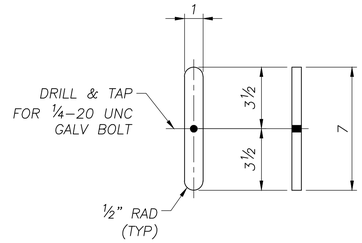


## 1 ~ HANDHOLE BAR ~ HB1

| PART MARK NO. | NO. OF PIECES REQ'D. | SECTION SYM | DESCRIPTION OF MATERIAL | LENGTH FEET | LENGTH INCHES | PARTS FOR ONE UNIT |
|---|---|---|---|---|---|---|
| HB1 | 1 | | HANDHOLE BAR | | | |
| w2 | 1 | PL | 1/4 x 1 (GALV A123) | 0 | 7 | 1 |

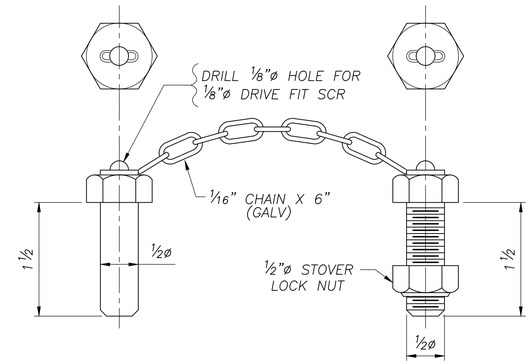


## 4 ~ HINGE PIN ASSEMBLY ~ 78P1

MAT'L SPECS: ASTM A307 (ZINC PL UN)

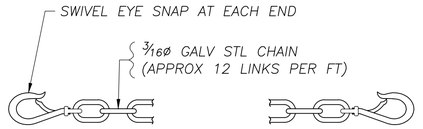


## ~ SAFETY CHAIN ~

| MARK | QTY | LENGTH |
|---|---|---|
| 78S1 | 2 | 4'–6 |

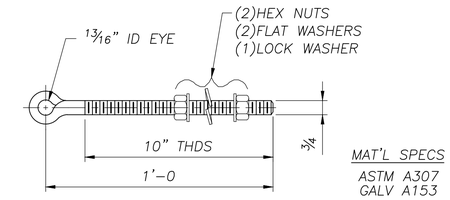


MAT'L SPECS
ASTM A307
GALV A153

## 2 ~ EYE BOLT ASSEMBLY ~ 78M1

NUTS: ASTM A563,GR.DH OR ASTM A194,GR.2H
WASHERS: ASTM F436 & ANSI–B18.21.1

**NOTE:**
SEE GENERAL NOTES DRAWING FOR MATERIAL SPECIFICATIONS, FOUNDATION AND STANDARD NOTES

REF DWGS: E12

OH–31B

AASHTO 6th Edition Spec's

SEALED BY:

SOUTH CAROLINA PROFESSIONAL ENGINEER
No. 38665
DAVID A LALLONE
Oct 25 2023

walpar
A valmont COMPANY
POST OFFICE BOX 28650
BIRMINGHAM ALABAMA 35228
4200 JEFFERSON AVENUE
BIRMINGHAM ALABAMA 35221
PHONE (205)–925–4990
FAX (205) 925–7273

| | |
|---|---|
| STATE: | South Carolina |
| FED PROJ: | Carolina Crossroads Phase 1 & 2 |
| ST PROJ: | P039718 |
| COUNTY: | Lexington & Richland |
| ROUTE: | I–26 & I–126 |
| SUBJECT: | SIGN STRUCTURES |
| | MISC DETAILS |
| FOR: | Archer–United Joint Venture |
| DRAWN BY: | DLK DATE: 10/2/23 |
| CHECKED BY: | DLJ DATE: 10/16/23 |
| DWG NO: | C3546–78 |

| NO: | REVISIONS | DATE | MADE | CHECKED |
|---|---|---|---|---|
| 0 | CHECK COMPLETE | 10/16/23 | DLK | DLJ |

KITDWG3

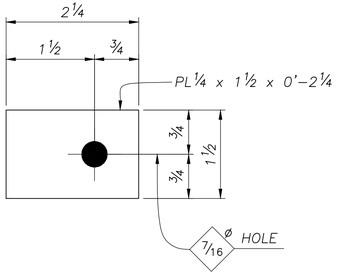


## 8 ~ CLAMP PLATES ~ 79M1

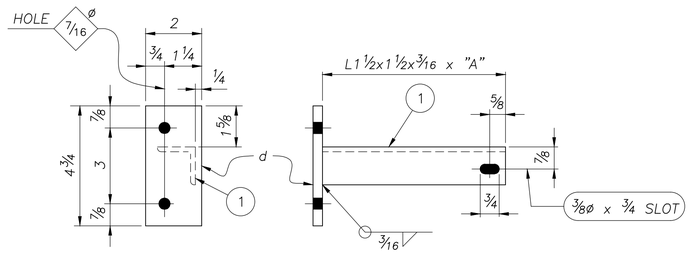


## ~ SAFETY CHAIN SUPPORT ~

(SEE CHART)

| MARK | QTY | "A" | (1) |
|---|---|---|---|
| 79M3 | 2 | 3'-0 | f |

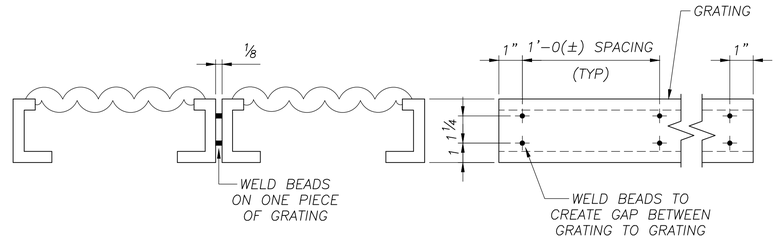


## GRATING GAP DETAIL

| | | | | | C3546-79 | | | |
|---|---|---|---|---|---|---|---|---|
| PARTS PER CONT | PART MARK NO | NO OF PIECES REQ'D | SECTION SYM | DESCRIPTION OF MATERIAL | LENGTH FEET | LENGTH INCHES | PARTS FOR ONE UNIT | |
| | 79M1 | 8 | | CLAMP PLATES | | | | |
| | a | 8 | PL | 1/4 x 1 1/2 | 0 | 2 1/4 | | |
| | 79M3 | 2 | | SAFETY CHAIN SUPPORT | | | | |
| | d | 2 | PL | 1/4 x 2 | 0 | 4 3/4 | | |
| | f | 2 | L | 1 1/2 x 1 1/2 x 3/16 | 3 | 0 | | |
| | 79G1A | 1 | | GRATING | | | | |
| | g | 1 | GRT | 18 3/4 WIDE | 18 | 0 | | |
| | n | 1 | GRT | 11 3/4 WIDE | 18 | 0 | | |
| | 79P1 | 4 | | HANDRAIL POSTS | | | | |
| | h | 4 | ALL | 2 1/2 x 1 1/2 x 3/16 (ALUM 6061) | 3 | 8 1/2 | | |
| | 79R1 | 4 | | HANDRAIL | | | | |
| | k | 4 | ALPI | 1.660 x .140 (ALUM 6061) | 9 | 0 | | |
| | 79A1 | 1 | | SAFETY ANGLE | | | | |
| | m | 1 | L | 4 x 3 x 1/4 | 18 | 0 | | |
| | 79L1 | 2 | | LIGHTING SUPPORTS (ALUM 6063-T6) | | | | |
| | p | 2 | ALUN | UNISTRUT 1 5/8 x 1 5/8 x .105 | 18 | 0 | | |

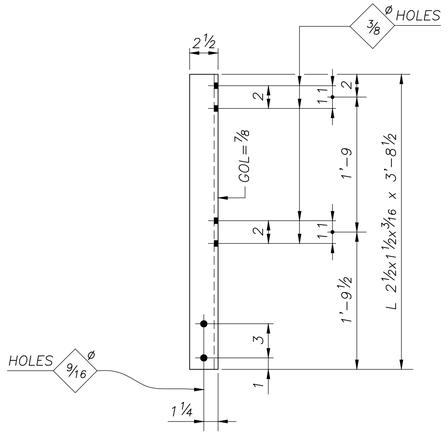


## 4 ~ HANDRAIL POSTS ~ 79P1

(ALUMINUM)

### SHOP NOTE:

GRATING TO BE "GRIP STRUT", OR EQUAL SAFETY GRATING 3" DEEP, FORMED FROM 12 GA SHEETS GALV AFTER FAB WELDED TOGETHER IN A COMBINATION OF THESE SIZES
(1) #8 DIAMOND 18 3/4" WIDE – CAT# 83012 AND
(1) #5 DIAMOND 11 3/4" WIDE – CAT# 53012

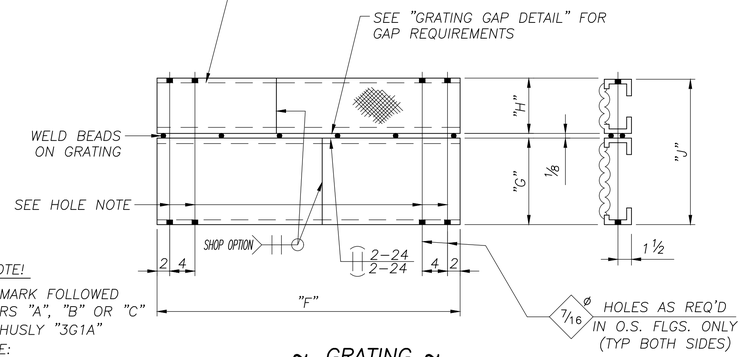


HOLE NOTE!

GRATING MARK FOLLOWED BY LETTERS "A", "B" OR "C" SHOWN THUSLY "3G1A"
DESIGNATE:
"A" – NO HOLES
"B" – HOLES 1-END
"C" – HOLES BOTH ENDS

## ~ GRATING ~

(SEE CHART)

| MARK | QTY | "F" | "G" | "H" | "J" |
|---|---|---|---|---|---|
| 79G1A | 1 | 18'-0 | 1'-6 3/4 | 11 3/4 | 2'-6 5/8 |

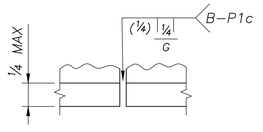


## TOE ANGLE SPLICE

( OPTIONAL )

### NOTE:

SEE GENERAL NOTES DRAWING FOR MATERIAL SPECIFICATIONS, FOUNDATION AND STANDARD NOTES

REF DWG: E12

OH-31B

AASHTO 6th Edition Spec's

SEALED BY:

SOUTH CAROLINA PROFESSIONAL ENGINEER
No. 38665
DAVID A LALLONE

Oct 25 2023

walpar
A valmont COMPANY


POST OFFICE BOX 28650
BIRMINGHAM ALABAMA 35228
4200 JEFFERSON AVENUE
BIRMINGHAM ALABAMA 35221
PHONE (205)-925-4990
FAX (205) 925-7273


| | |
|---|---|
| STATE: | South Carolina |
| FED PROJ: | Carolina Crossroads Phase 1 & 2 |
| ST PROJ: | P039718 |
| COUNTY: | Lexington & Richland |
| ROUTE: | I-26 & I-126 |

SUBJECT: SIGN STRUCTURE
MISC DETAILS

FOR: Archer-United Joint Venture

DRAWN BY: DLK DATE: 10/2/23
CHECKED BY: DLJ DATE: 10/16/23

DWG NO: C3546-79

| NO: | REVISIONS | DATE | MADE | CHECKED |
|---|---|---|---|---|
| 0 | CHECK COMPLETE | 10/16/23 | DLK | DLJ |

| MARK | QTY | "A" | "B" | "C" | "D" | "E" | "F" | "G" | "H" |
|---|---|---|---|---|---|---|---|---|---|
| 80C1 | 1 | 26'–7½ | 23'–1½ | 3'–6 | 2'–6 | 1'–0½ | 2 @ 6 = 1'–0 | 1'–2¼ | 2 @ 6 = 1'–0 |

| MARK | "J" | "K" | "L" | "M" | "N" QTY | "N" DIA | "P" | "S" | "T" | 1 | 2 | 3 | 4 | 5 | 6 | 7 | 8 |
|---|---|---|---|---|---|---|---|---|---|---|---|---|---|---|---|---|---|
| 80C1 | 2½ | 2 15/16 | 6¼ | 5/16 | 8 | 1¾ | 2½ | 2'–0 1/16 | ¼ | a | b | d | f | k | m | n | h |

| PARTS PER CONT | PART MARK NO | NO. OF PIECES REQ'D | SECTION SYM | DESCRIPTION OF MATERIAL | LENGTH FEET | LENGTH INCHES | PARTS FOR ONE UNIT | |
|---|---|---|---|---|---|---|---|---|
| | 80C1 | 1 | | CANTILEVER POST | | | | |
| | a | 1 | PIPE | 24.000 x .375 | 26 | 6 5/8 | | |
| | b | 1 | PL | 1½ x 35 DIA. | – | – | | |
| | d | 1 | PL | ½ x 30 | 2 | 7 | | |
| | f | 1 | PL | ½ x 30 | 2 | 7 | | |
| | k | 4 | PL | ½ x 2½ | 0 | 2½ | | |
| | m | 4 | PL | ½ x 2 15/16 | 0 | 2 15/16 | | |
| | n | 8 | PL | ½ x 6¼ | 0 | 6¼ | | |
| | h | 8 | PL | ½ x 5 | 1 | 0 | | |
| | v1 | 1 | PIPE | 6.625 x .864 | 0 | 3 | | |
| | z1 | 3 | OP | 1¼" FORGED HALF CPLG (3000#) | – | – | | |

C3546–80

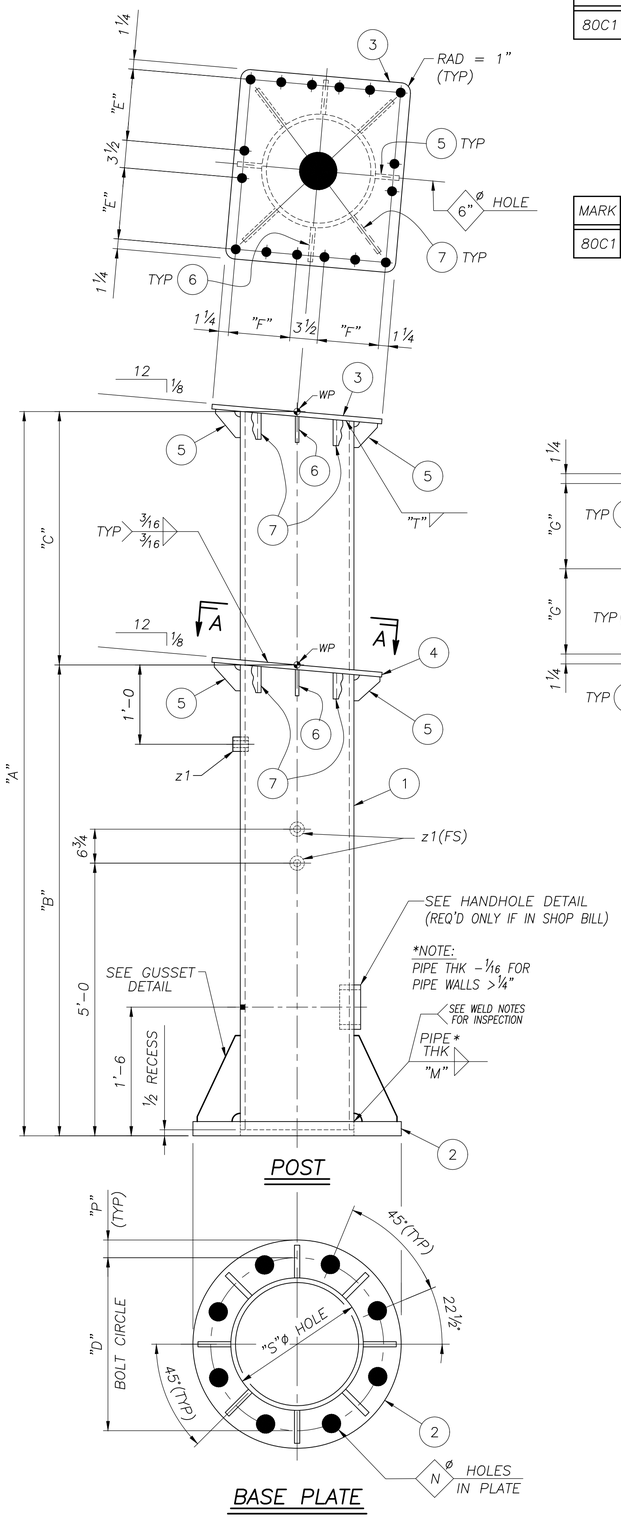


POST




BASE PLATE

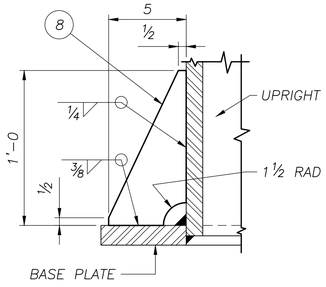


TYP GUSSET DETAIL

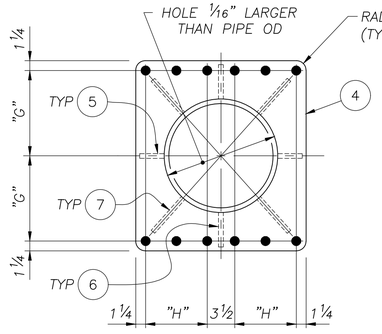


SECTION A–A

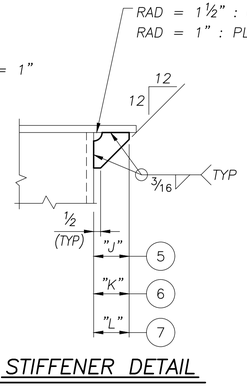


STIFFENER DETAIL

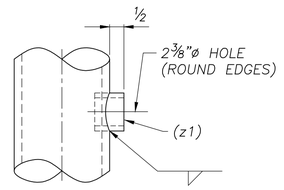


WIRE OUTLET DETAIL

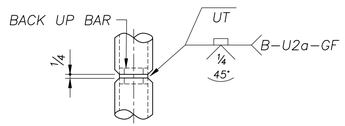


OPTIONAL SPLICE

(FOR WALL THK 5/16" OR GREATER ONLY)

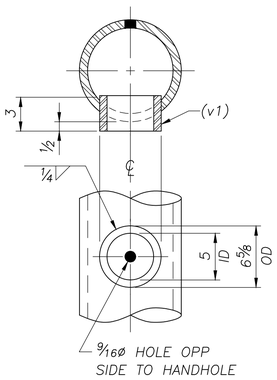


HANDHOLE DETAIL

**NOTE:**
ALL HOLES TO BE 7/8 ø UNLESS NOTED

**NOTE:**
SEE GENERAL NOTES DRAWING FOR MATERIAL SPECIFICATIONS, FOUNDATION AND STANDARD NOTES

REF DWG: E12

OH–31B

AASHTO 6th Edition Spec's

SEALED BY:

SOUTH CAROLINA PROFESSIONAL ENGINEER
No. 38665
DAVID A LALLOUE

Oct 25 2023

| NO: | REVISIONS | DATE | MADE | CHECKED |
|---|---|---|---|---|
| 0 | CHECK COMPLETE | 10/16/23 | DLK | DLJ |


walpar
A valmont COMPANY
POST OFFICE BOX 28650
BIRMINGHAM ALABAMA 35228
4200 JEFFERSON AVENUE
BIRMINGHAM ALABAMA 35221
PHONE (205)–925–4990
FAX (205) 925–7273


0

CBTUPDET

| | |
|---|---|
| STATE: | South Carolina |
| FED PROJ: | Carolina Crossroads Phase 1 & 2 |
| ST PROJ: | P039718 |
| COUNTY: | Lexington & Richland |
| ROUTE: | I–26 & I–126 |
| SUBJECT: | CANTILEVER SIGN SUPPORT DETAILS OF UPRIGHT |
| FOR: | Archer–United Joint Venture |
| DRAWN BY: | DLK DATE: 10/2/23 |
| CHECKED BY: | DLJ DATE: 10/16/23 |
| DWG NO: | C3546–80 |

NAME: E:\acad\JobsNPrg\3546\3546–80.dwg DATE: OCT 16, 2023 TIME: 4:27 AM dj706290

| MARK | QTY | "A" | "C" | PANELS | "D" | "E" | "F" | "G" | "H" | "J" | "K" | "L" | "M" | "N" | "P" | | | | |
|---|---|---|---|---|---|---|---|---|---|---|---|---|---|---|---|---|---|---|---|
| 81T1 | 1 | 34'–1¾ | 3'–6 | 8 @ 3'–9⅞(±) = 30'–7¼ | 3'–0 | 1'–0½ | 2 @ 6 = 1'–0 | 2'–4½ | 2 @ 6 = 1'–0 | 16'–0⅝ | 2'–9½ | 3¾ | 1½ | 2 9/16 | 3 3/16 | | | | |

| MARK | "R" | "S" | "T" | "V" | 1 | 2 | 3 | 4 | 5 | 6 | 7 | 8 | 9 | | 11 |
|---|---|---|---|---|---|---|---|---|---|---|---|---|---|---|---|
| 81T1 | 3'–3½ | 29'–6 13/16 | ------- | ------- | a | b | d | f | g | h | k | m | n | | z1 |

| VENT HOLE SIZES | |
|---|---|
| WEB MEMBER (OD) | HOLE DIA ± ¼" |
| < 3.500 | ¾ |
| 3.500 | 1¾ |
| 4.000 | 2 |
| 4.500 | 2¼ |
| 5.563 | 2¾ |
| 6.625 | 3¼ |

| PARTS PER CONT | PART MARK NO | NO OF PIECES REQ'D | SECTION SYM | DESCRIPTION OF MATERIAL | LENGTH FEET | LENGTH INCHES | PARTS FOR ONE UNIT | |
|---|---|---|---|---|---|---|---|---|
| | 81T1 | 1 | | CANTILEVER TRUSS | | | | |
| | a | 4 | PIPE | 3.500 x .188 | 34 | 1¾ | | |
| | b | 18 | PIPE | 1.315 x .133 | 3 | 2 11/16 | | |
| | d | 16 | PIPE | 1.315 x .133 | 4 | 8 11/16 | | |
| | f | 3 | PIPE | 1.660 x .140 | 2 | 8 13/16 | | |
| | g | 16 | PIPE | 1.660 x .140 | 4 | 4½ | | |
| | h | 4 | PIPE | 1.315 x .133 | 4 | 4 | | |
| | k | 1 | PL | ½ x 30 | 2 | 8½ | | |
| | m | 2 | PL | ½ x 3¼ | 2 | 6 | | |
| | n | 8 | PL | ¼ x 1½ | 0 | 3¼ | | |
| | z1 | 2 | OP | 1¼" FORGED HALF CPLG (3000#) | – | – | | |

C3546–81

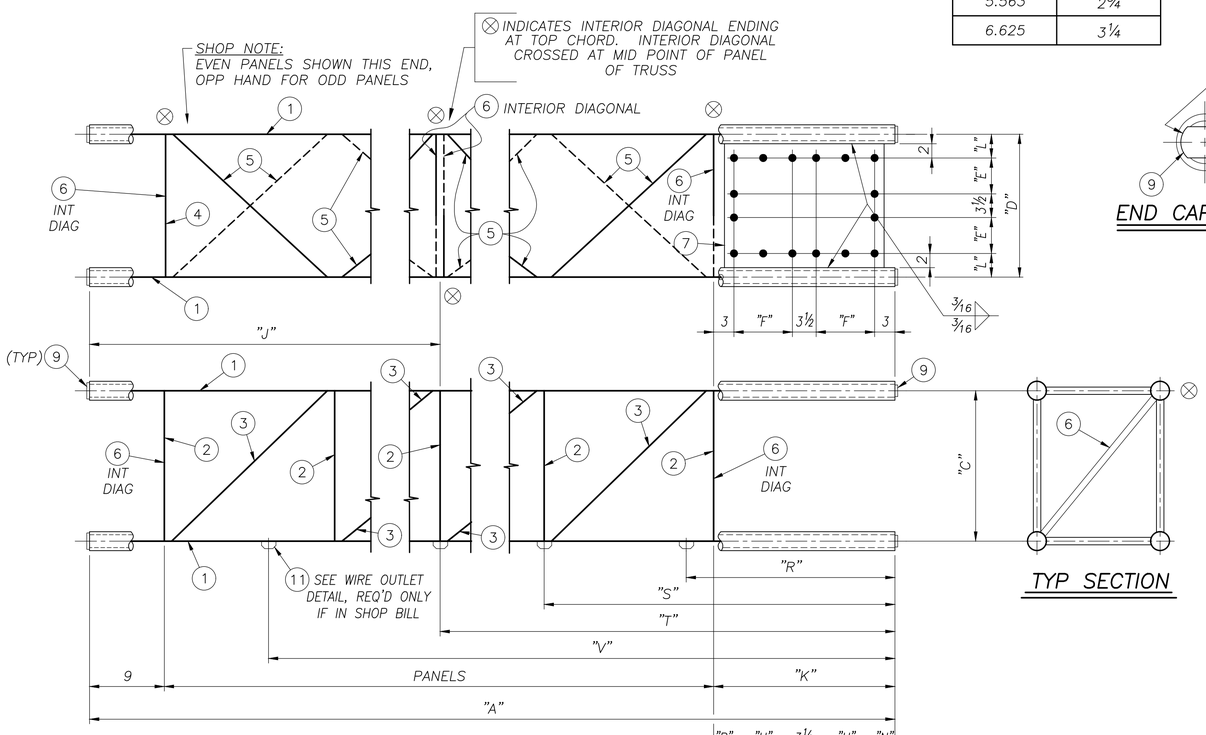


TYP SECTION

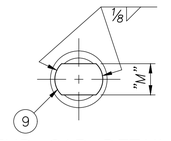


END CAP DETAIL

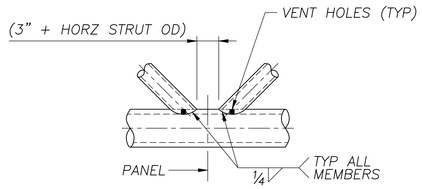


JOINT DETAIL

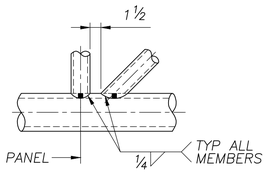


JOINT DETAIL

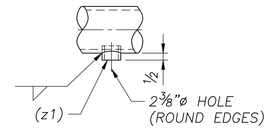


WIRE OUTLET DETAIL

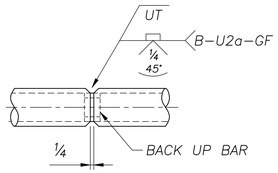


OPTIONAL CHORD SPLICE

(FOR WALL THK 5/16" OR GREATER ONLY)

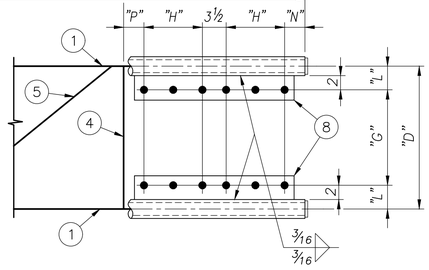


TRUSS

SHOP NOTE:

INTERIOR DIAGONALS MAY BE OFFST UP TO 6" FROM PANEL POINTS ON TRUSS IN ORDER TO AVOID INTERSECTING WELDS IN THE AREA OF OF OTHER WEB MEMBERS.

NOTE:

ALL HOLES TO BE ⌀ 7/8 UNLESS NOTED

NOTE:

SEE GENERAL NOTES DRAWING FOR MATERIAL SPECIFICATIONS, FOUNDATION AND STANDARD NOTES

REF DWG: E12

OH–31B

AASHTO 6th Edition Spec's

SEALED BY:

SOUTH CAROLINA PROFESSIONAL ENGINEER No. 38665 DAVID A LALLONE

Oct 25 2023

| NO: | REVISIONS | DATE | MADE | CHECKED |
|---|---|---|---|---|
| 0 | CHECK COMPLETE | 10/16/23 | DLK | DLJ |

walpar A valmont COMPANY

POST OFFICE BOX 28650
BIRMINGHAM ALABAMA 35228
4200 JEFFERSON AVENUE
BIRMINGHAM ALABAMA 35221
PHONE (205)–925–4990
FAX (205) 925–7273

0

STATE: South Carolina
FED PROJ: Carolina Crossroads Phase 1 & 2
ST PROJ: P039718
COUNTY: Lexington & Richland
ROUTE: I–26 & I–126

SUBJECT: CANTILEVER SIGN SUPPORT
DETAIL OF TRUSS
FOR: Archer–United Joint Venture

DRAWN BY: DLK DATE: 10/2/23
CHECKED BY: DLJ DATE: 10/16/23
DWG NO: C3546–81

BTCTDET

NAME: E:\acad\JobsNPrg\3546\3546–81.dwg DATE: OCT 16, 2023 TIME: 4:27 AM dj706290

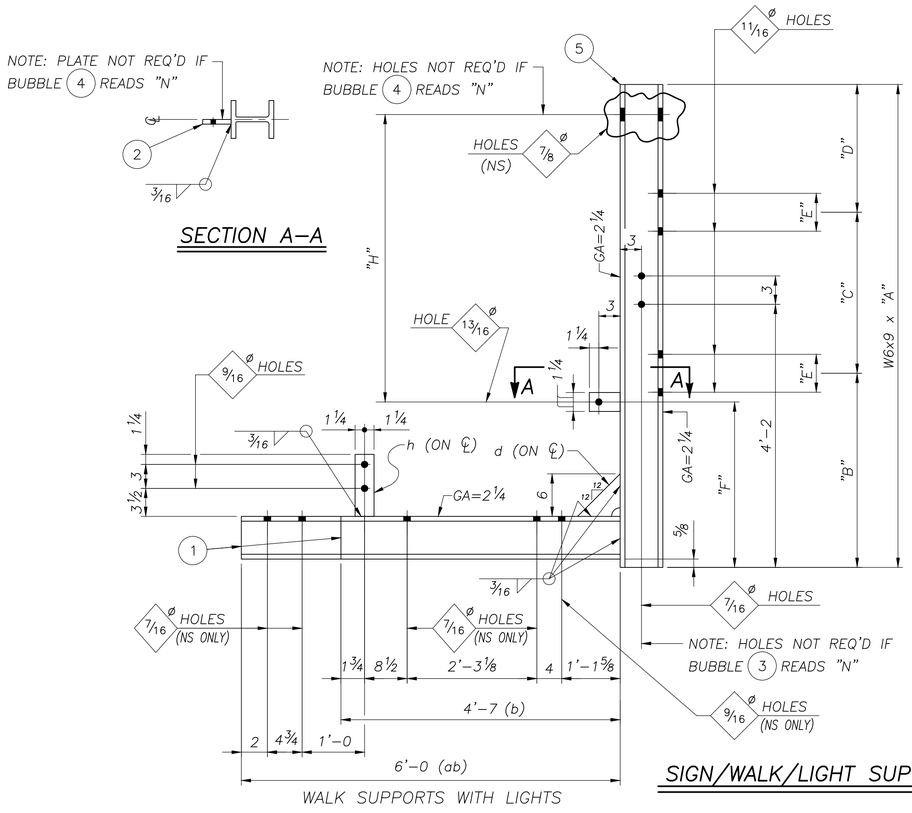


WALK SUPPORTS WITH LIGHTS

## SIGN/WALK/LIGHT SUPPORTS

| MARK | QTY | "A" | "B" | "C" | "D" | "E" | "F" | "H" | 1 | 2 | 3 | 4 | 5 |
|---|---|---|---|---|---|---|---|---|---|---|---|---|---|
| 82S1 | 1 | 8'–5 | 4'–5 | 3'–6 | 6 | 4 1/8 | ---- | ---- | b | – | Y | N | a |
| 82S2 | 1 | 8'–5 | 4'–5 | 3'–6 | 6 | 4 1/8 | ---- | ---- | b | – | N | N | aa |
| 82S3 | 1 | 8'–5 | 4'–5 | 3'–6 | 6 | 4 1/8 | 2'–3 1/4 | 5'–2 1/2 | ab | f | N | Y | ba |
| 82S4 | 1 | 8'–5 | 4'–5 | 3'–6 | 6 | 4 1/8 | 2'–3 1/4 | 5'–2 1/2 | ab | f | Y | Y | da |

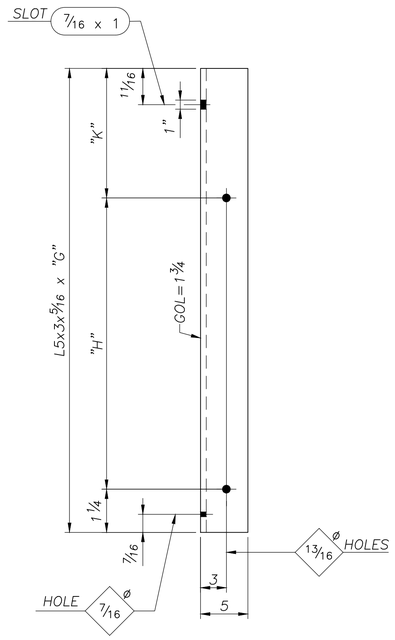


## SIGN HANGERS

| MARK | QTY | "G" | "H" | "K" |
|---|---|---|---|---|
| 82H1 | 2 | 8'–0 1/4 | 5'–2 1/2 | 2'–8 1/2 |

| PARTS PER CONT | PART MARK NO | NO OF PIECES REQ'D | SECTION SYM | DESCRIPTION OF MATERIAL | LENGTH FEET | LENGTH INCHES | PARTS FOR ONE UNIT |
|---|---|---|---|---|---|---|---|
| | 82S1 | 1 | | WALK SUPPORT | | | |
| | a | 1 | W | 6 x 9 | 8 | 5 | |
| | b | 1 | W | 6 x 9 | 4 | 7 | |
| | d | 1 | PL | 1/4 x 6 | 0 | 6 | |
| | h | 1 | PL | 1/2 x 2 1/2 | 0 | 7 3/4 | |
| | 82S2 | 1 | | WALK SUPPORT | | | |
| | aa | 1 | W | 6 x 9 | 8 | 5 | |
| | b | 1 | W | 6 x 9 | 4 | 7 | |
| | d | 1 | PL | 1/4 x 6 | 0 | 6 | |
| | h | 1 | PL | 1/2 x 2 1/2 | 0 | 7 3/4 | |
| | 82S3 | 1 | | SIGN/WALK/LIGHT SUPPORT | | | |
| | ba | 1 | W | 6 x 9 | 8 | 5 | |
| | ab | 1 | W | 6 x 9 | 6 | 0 | |
| | d | 1 | PL | 1/4 x 6 | 0 | 6 | |
| | f | 1 | PL | 3/8 x 2 1/2 | 0 | 4 1/4 | |
| | h | 1 | PL | 1/2 x 2 1/2 | 0 | 7 3/4 | |
| | 82S4 | 1 | | SIGN/WALK/LIGHT SUPPORT | | | |
| | da | 1 | W | 6 x 9 | 8 | 5 | |
| | ab | 1 | W | 6 x 9 | 6 | 0 | |
| | d | 1 | PL | 1/4 x 6 | 0 | 6 | |
| | f | 1 | PL | 3/8 x 2 1/2 | 0 | 4 1/4 | |
| | h | 1 | PL | 1/2 x 2 1/2 | 0 | 7 3/4 | |
| | | | | | | | |
| | 82H1 | 2 | | SIGN HANGERS | | | |
| | k | 2 | L | 5 x 3 x 5/16 | 8 | 0 1/4 | |
| | | | | | | | |

C3546–82

**NOTE:**
SEE GENERAL NOTES DRAWING FOR MATERIAL SPECIFICATIONS, FOUNDATION AND STANDARD NOTES

REF DWG: E12

OH–31B

AASHTO 6th Edition Spec's

SEALED BY:

SOUTH CAROLINA PROFESSIONAL ENGINEER
No. 38665
DAVID A LALLONE
Oct 25 2023

| NO: | REVISIONS | DATE | MADE | CHECKED |
|---|---|---|---|---|
| 0 | CHECK COMPLETE | 10/16/23 | DLK | DLJ |


walpar
A valmont COMPANY
POST OFFICE BOX 28650
BIRMINGHAM ALABAMA 35228
4200 JEFFERSON AVENUE
BIRMINGHAM ALABAMA 35221
PHONE (205)–925–4990
FAX (205) 925–7273


0

STATE: South Carolina
FED PROJ: Carolina Crossroads Phase 1 & 2
ST PROJ: P039718
COUNTY: Lexington & Richland
ROUTE: I–26 & I–126

SUBJECT: SIGN SUPPORT
WALK SUPPORT & SIGN HANGER DETAILS

FOR: Archer–United Joint Venture

DRAWN BY: DLK DATE: 10/2/23
CHECKED BY: DLJ DATE: 10/16/23

DWG NO: C3546–82

SH–DET4

NAME: E:\acad\JobsNProg\3546\3546–82.dwg DATE: OCT 16, 2023 TIME: 4:26 AM dj706290

C3546–83
SOUTH CAROLINA

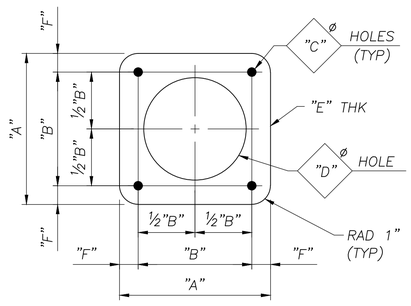


TYPE "AA"
(SEE CHART FOR INFORMATION)

## ANCHOR TEMPLATE CHART (ALL DIMENSIONS IN INCHES)

| MARK | QTY | TYPE | "A" | "B" | "C" | "D" | "E" | "F" |
|---|---|---|---|---|---|---|---|---|
| 83P1 | 4 | AA | 17½ | 13½ | 1⅝ | 13½ | ¼ | 2 |
| 83P2 | 4 | AA | 18 | 14 | 1⅞ | 14 | ¼ | 2 |

**NOTE:**
THREADS (ROLLED OR CUT) FOR "H" NUT

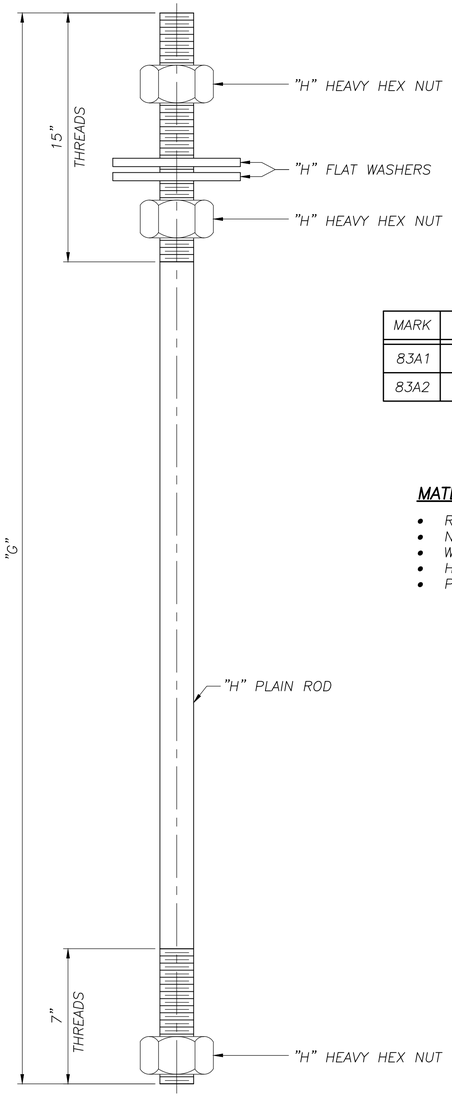


## ~ ANCHOR BOLTS ~

| MARK | "G" | "H"ø | (TPI) | ROD QTY | NUT QTY | FW QTY | |
|---|---|---|---|---|---|---|---|
| 83A1 | 4'–6 | 1½ | 6 | 8 | 24 | 16 | |
| 83A2 | 4'–6 | 1¾ | 5 | 8 | 24 | 16 | |

**MATERIAL SPECS:**

- RODS – ASTM F1554, GRADE 55, S1
- NUTS – ASTM A563,GR.DH OR ASTM A194,GR.2H
- WASHERS – ASTM F436
- HARDWARE – GALV PER ASTM–A153
- PLAIN ROD – GALV FULL LENGTH PER ASTM–A153

| PARTS PER CONT | PART MARK NO | NO OF PIECES REQ'D | SECTION SYM | DESCRIPTION OF MATERIAL | LENGTH FEET | LENGTH INCHES | PARTS FOR ONE UNIT | |
|---|---|---|---|---|---|---|---|---|
| | 83P1 | 4 | | ANCHOR TEMPLATES | | | | |
| | a | 4 | PL | ¼ x 17½ | 1 | 5½ | | |
| | 83P2 | 4 | | ANCHOR TEMPLATES | | | | |
| | aa | 4 | PL | ¼ x 18 | 1 | 6 | | |

C3546–83

| SHIPPING LIST | | |
|---|---|---|
| QTY | MARK | DESCRIPTION |
| 4 | 83P1 | ANCHOR TEMPLATES |
| 4 | 83P2 | ANCHOR TEMPLATES |
| 8 | 83A1 | ANCHOR BOLTS |
| 8 | 83A2 | ANCHOR BOLTS |

NOTE: SHOP SHIP FROM THIS DRAWING

**NOTE:**
DO NOT GALVANIZE TEMPLATES

**NOTE:**
SEE GENERAL NOTES DRAWING FOR MATERIAL SPECIFICATIONS, FOUNDATION AND STANDARD NOTES

REF DWG: E13

OH–12

AASHTO 6th Edition Spec's

SEALED BY:

SOUTH CAROLINA LICENSED PROFESSIONAL ENGINEER
No. 38665
DAVID A LALLOUE

Oct 25 2023

| NO: | REVISIONS | DATE | MADE | CHECKED |
|---|---|---|---|---|
| 0 | CHECK COMPLETE | 10/16/23 | DLK | DLJ |

walpar
A valmont COMPANY


POST OFFICE BOX 28650
BIRMINGHAM ALABAMA 35228
4200 JEFFERSON AVENUE
BIRMINGHAM ALABAMA 35221
PHONE (205)–925–4990
FAX (205) 925–7273


0

STATE: South Carolina
FED PROJ: Carolina Crossroads Phase 1 & 2
ST PROJ: P039718
COUNTY: Lexington & Richland
ROUTE: I–26 & I–126

SUBJECT: SIGN STRUCTURE
ANCHOR TEMPLATE & SOLE PLATE DETAILS

FOR: Archer–United Joint Venture

DRAWN BY: DLK DATE: 10/3/23
CHECKED BY: DLJ DATE: 10/16/23

DWG NO: C3546–83

ABAT_TEMP


NAME: E:\acad\JobsNProg\3546\3546–83.dwg DATE: OCT 16, 2023 TIME: 4:26 AM djf06290

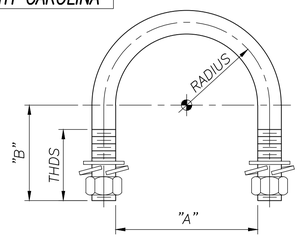


**NOTE 1:**
- UBOLT MATERIAL PROPERTIES TO MEET OR EXCEED A307
- GALV PER A153

**NOTE 2:**
- UBOLT MATERIAL PROPERTIES TO MEET OR EXCEED A307
- ZINC PL PER B633

## ~ U-BOLTS w/(2ea) HN/LW/FW ~

NUTS: ASTM A563,GR.DH OR ASTM A194,GR.2H
WASHERS: ASTM F436 & ANSI-B18.21.1

| MARK | QTY | DIA | "A" | "B" | RADIUS | THDS | MATERIAL |
|---|---|---|---|---|---|---|---|
| U1 | 20 | 5/16 | 1 11/16 | 1 5/8 | 1 | 1 1/4 | NOTE 2 |
| U6 | 40 | 1/2 | 6 3/4 | 5 1/4 | 3 5/8 | 2 | NOTE 1 |
| U11 | 8 | 5/8 | 6 3/4 | 5 1/2 | 3 11/16 | 2 | NOTE 1 |

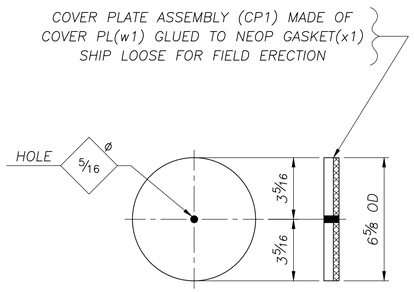


## 1 ~ COVER PLATE ASSEMBLY ~ CP1

| PART MARK NO. | NO. OF PIECES REQ'D | SECTION SYM | DESCRIPTION OF MATERIAL | LENGTH FEET | LENGTH INCHES | PARTS FOR ONE UNIT |
|---|---|---|---|---|---|---|
| CP1 | 1 | | COVER PLATE ASSEMBLY | | | |
| w1 | 1 | PL | 1/4 x 6 5/8 DIA. (GALV A123) | – | – | 1 |
| x1 | 1 | OP | 1/8 x 6 5/8 DIA. (NEOP GASKET) | – | – | 1 |

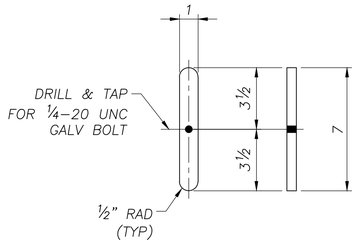


## 1 ~ HANDHOLE BAR ~ HB1

| PART MARK NO. | NO. OF PIECES REQ'D | SECTION SYM | DESCRIPTION OF MATERIAL | LENGTH FEET | LENGTH INCHES | PARTS FOR ONE UNIT |
|---|---|---|---|---|---|---|
| HB1 | 1 | | HANDHOLE BAR | | | |
| w2 | 1 | PL | 1/4 x 1 (GALV A123) | 0 | 7 | 1 |

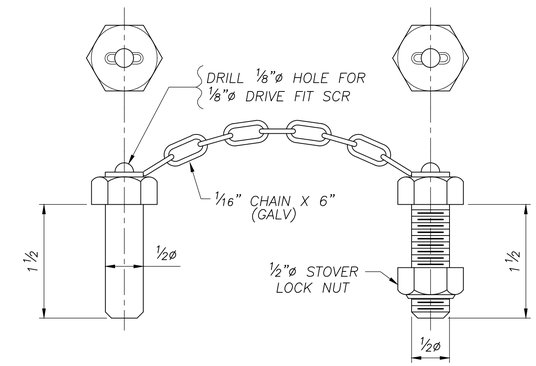


## 10 ~ HINGE PIN ASSEMBLY ~ 84P1

MAT'L SPECS: ASTM A307 (ZINC PL UN)

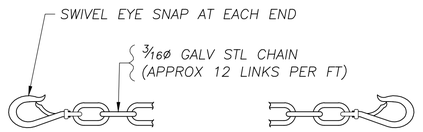


## ~ SAFETY CHAIN ~

| MARK | QTY | LENGTH |
|---|---|---|
| 84S1 | 2 | 4'-6 |




## ~ POLE CAPS ~

(ALUM 356-F) (ASTM B26, A356)

| MARK | QTY | PART No | REMARKS |
|---|---|---|---|
| C12 | 2 | 291 | 12 3/4ø PIPE |
| C14 | 2 | 283 | 14ø PIPE |

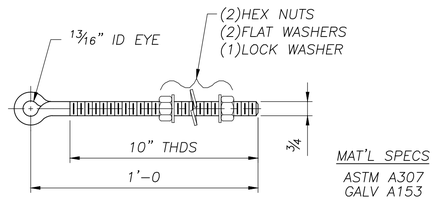


## 7 ~ EYE BOLT ASSEMBLY ~ 84M1

NUTS: ASTM A563,GR.DH OR ASTM A194,GR.2H
WASHERS: ASTM F436 & ANSI-B18.21.1

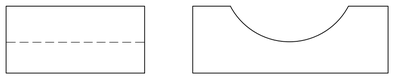

## ~ SADDLE SHIM DETAIL ~

(ALUM 356-T6)

| MARK | QTY | PART No | REMARKS |
|---|---|---|---|
| S6 | 4 | 360 | FOR 6 5/8 |

**NOTE:**
SEE GENERAL NOTES DRAWING FOR MATERIAL SPECIFICATIONS, FOUNDATION AND STANDARD NOTES

REF DWGS: E13

OH-12

AASHTO 6th Edition Spec's

SEALED BY:

SOUTH CAROLINA PROFESSIONAL ENGINEER
No. 38665
DAVID A LALLIONE

Oct 25 2023

walpar
A valmont COMPANY
POST OFFICE BOX 28650
BIRMINGHAM ALABAMA 35228
4200 JEFFERSON AVENUE
BIRMINGHAM ALABAMA 35221
PHONE (205)-925-4990
FAX (205) 925-7273

| NO: | REVISIONS | DATE | MADE | CHECKED |
|---|---|---|---|---|
| 0 | CHECK COMPLETE | 10/16/23 | DLK | DLJ |

STATE: South Carolina
FED PROJ: Carolina Crossroads Phase 1 & 2
ST PROJ: P039718
COUNTY: Lexington & Richland
ROUTE: I-26 & I-126

SUBJECT: SIGN STRUCTURES
MISC DETAILS
FOR: Archer-United Joint Venture

DRAWN BY: DLK DATE: 10/3/23
CHECKED BY: DLJ DATE: 10/16/23

DWG NO: C3546-84

KITDWG3

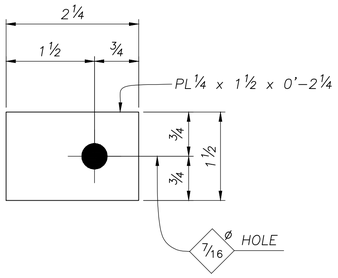


## 20 ~ CLAMP PLATES ~ 85M1

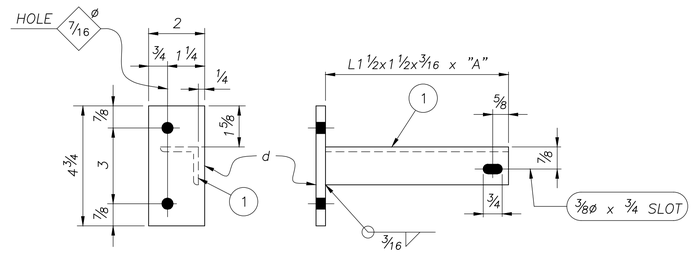


## ~ SAFETY CHAIN SUPPORT ~

(SEE CHART)

| MARK | QTY | "A" | (1) |
|---|---|---|---|
| 85M3 | 2 | 3'-0 | f |

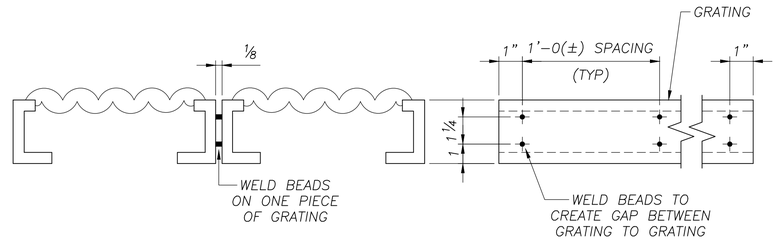


## GRATING GAP DETAIL

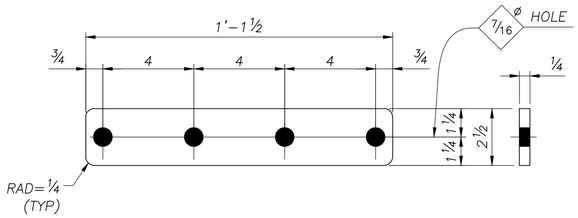


## 4 ~ SPLICE PLATES ~ 85M2

(FOR GRATING)

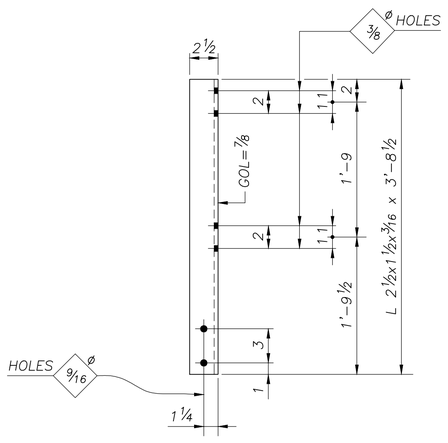


## 10 ~ HANDRAIL POSTS ~ 85P1

(ALUMINUM)

### SHOP NOTE:

GRATING TO BE "GRIP STRUT", OR EQUAL SAFETY GRATING 3" DEEP, FORMED FROM 12 GA SHEETS GALV AFTER FAB WELDED TOGETHER IN A COMBINATION OF THESE SIZES
(1) #8 DIAMOND 18¾" WIDE – CAT# 83012 AND
(1) #5 DIAMOND 11¾" WIDE – CAT# 53012

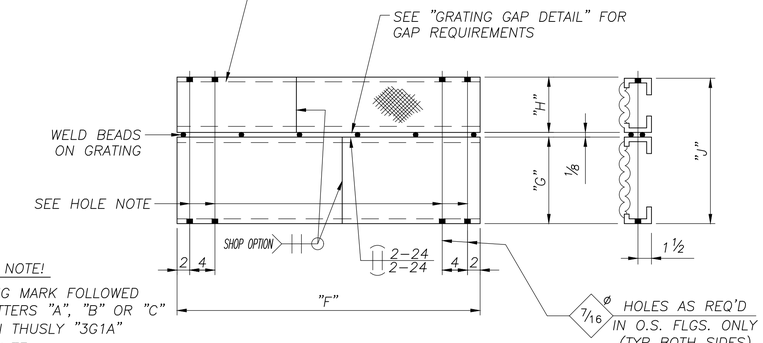


HOLE NOTE!

GRATING MARK FOLLOWED BY LETTERS "A", "B" OR "C" SHOWN THUSLY "3G1A" DESIGNATE:
"A" – NO HOLES
"B" – HOLES 1–END
"C" – HOLES BOTH ENDS

## ~ GRATING ~

(SEE CHART)

| MARK | QTY | "F" | "G" | "H" | "J" |
|---|---|---|---|---|---|
| 85G1B | 2 | 17'-9 | 1'-6¾ | 11¾ | 2'-6⅝ |
| 85G2C | 1 | 15'-3 | 1'-6¾ | 11¾ | 2'-6⅝ |

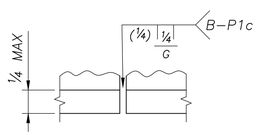


## TOE ANGLE SPLICE

( OPTIONAL )

## NOTE:

SEE GENERAL NOTES DRAWING FOR MATERIAL SPECIFICATIONS, FOUNDATION AND STANDARD NOTES

REF DWG: E13

AASHTO 6th Edition Spec's

OH–12

| PARTS PER CONT | PART MARK NO | NO OF PIECES REQ'D | SECTION SYM | DESCRIPTION OF MATERIAL | LENGTH FEET | LENGTH INCHES | PARTS FOR ONE UNIT | |
|---|---|---|---|---|---|---|---|---|
| | 85M1 | 20 | | CLAMP PLATES | | | | |
| | a | 20 | PL | 1/4 x 1 1/2 | 0 | 2 1/4 | | |
| | 85M2 | 4 | | SPLICE PLATES | | | | |
| | b | 4 | PL | 1/4 x 2 1/2 | 1 | 1 1/2 | | |
| | 85M3 | 2 | | SAFETY CHAIN SUPPORT | | | | |
| | d | 2 | PL | 1/4 x 2 | 0 | 4 3/4 | | |
| | f | 2 | L | 1 1/2 x 1 1/2 x 3/16 | 3 | 0 | | |
| | 85G1B | 2 | | GRATING | | | | |
| | g | 2 | GRT | 18 3/4 WIDE | 17 | 9 | | |
| | n | 2 | GRT | 11 3/4 WIDE | 17 | 9 | | |
| | 85G2C | 1 | | GRATING | | | | |
| | ag | 1 | GRT | 18 3/4 WIDE | 15 | 3 | | |
| | an | 1 | GRT | 11 3/4 WIDE | 15 | 3 | | |
| | 85P1 | 10 | | HANDRAIL POSTS | | | | |
| | h | 10 | ALL | 2 1/2 x 1 1/2 x 3/16 (ALUM 6061) | 3 | 8 1/2 | | |
| | 85R1 | 8 | | HANDRAIL | | | | |
| | k | 8 | ALPI | 1.660 x .140 (ALUM 6061) | 10 | 3 | | |
| | 85R2 | 2 | | HANDRAIL | | | | |
| | ak | 2 | ALPI | 1.660 x .140 (ALUM 6061) | 9 | 9 | | |
| | 85A1 | 2 | | SAFETY ANGLE | | | | |
| | m | 2 | L | 4 x 3 x 1/4 | 25 | 4 1/2 | | |
| | 85L1 | 4 | | LIGHTING SUPPORTS (ALUM 6063-T6) | | | | |
| | p | 4 | ALUN | UNISTRUT 1 5/8 x 1 5/8 x .105 | 25 | 4 1/2 | | |

C3546–85

SEALED BY:

SOUTH CAROLINA PROFESSIONAL ENGINEER
No. 38665
DAVID A LALLONE

Oct 25 2023

| NO: | REVISIONS | DATE | MADE | CHECKED |
|---|---|---|---|---|
| 0 | CHECK COMPLETE | 10/16/23 | DLK | DLJ |


walpar
A valmont COMPANY
POST OFFICE BOX 28650
BIRMINGHAM ALABAMA 35228
4200 JEFFERSON AVENUE
BIRMINGHAM ALABAMA 35221
PHONE (205)-925-4990
FAX (205) 925-7273


STATE: South Carolina
FED PROJ: Carolina Crossroads Phase 1 & 2
ST PROJ: P039718
COUNTY: Lexington & Richland
ROUTE: I–26 & I–126

SUBJECT: SIGN STRUCTURE
MISC DETAILS
FOR: Archer–United Joint Venture

DRAWN BY: DLK DATE: 10/3/23
CHECKED BY: DLJ DATE: 10/16/23
DWG NO: C3546–85

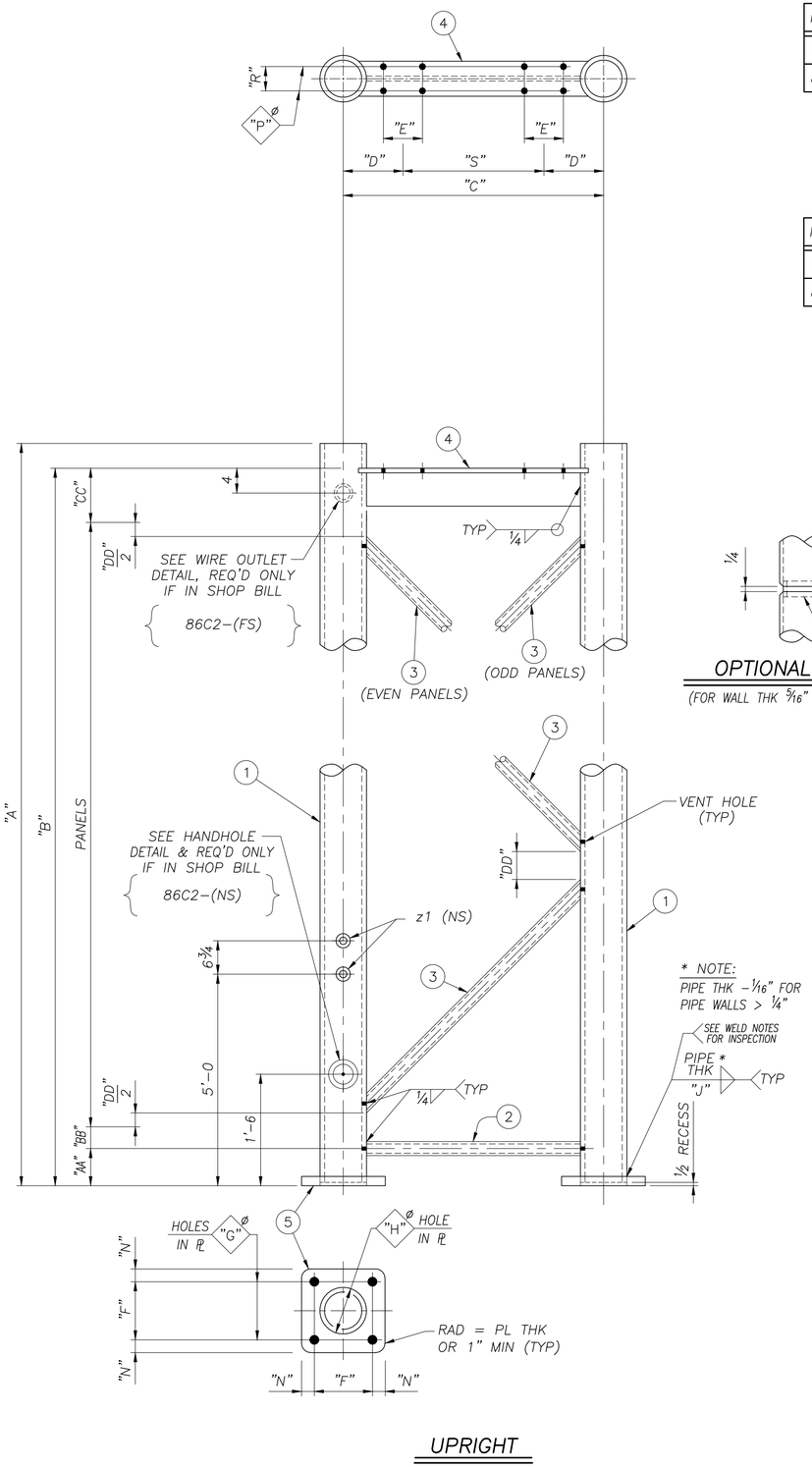


UPRIGHT

| MARK | QTY | "A" | "B" | "C" | PANELS | "D" | "E" | "F" | "G" |
|---|---|---|---|---|---|---|---|---|---|
| 86C1 | 1 | 21'–6 3/16 | 21'–2 3/16 | 5'–6 | 4 @ 4'–10 15/16(±) = 19'–7 1/16 | 1'–1 1/2 | 7 3/8 | 1'–1 1/2 | 1 3/4 |
| 86C2 | 1 | 31'–2 7/16 | 30'–10 7/16 | 5'–6 | 5 @ 5'–10 5/16(±) = 29'–3 1/16 | 1'–1 1/2 | 7 3/8 | 1'–2 | 2 |

| MARK | "H" | "J" | | | | "N" | "P" | "R" | "S" | | 1 | 2 | 3 | 4 | 5 | | |
|---|---|---|---|---|---|---|---|---|---|---|---|---|---|---|---|---|---|
| 86C1 | 1'–0 13/16 | 5/16 | | | | 2 1/2 | 13/16 | 4 1/2 | 3'–3 | | a | b | d | f | h | | |
| 86C2 | 1'–2 1/16 | 5/16 | | | | 2 1/2 | 13/16 | 4 1/2 | 3'–3 | | aa | ab | ad | af | ah | | |

| MARK | "AA" | "BB" | "CC" | "DD" |
|---|---|---|---|---|
| 86C1 | 6 1/4 | 3 1/2 | 8 3/4 | 6 1/2 |
| 86C2 | 6 1/2 | 3 1/2 | 8 3/4 | 6 1/2 |

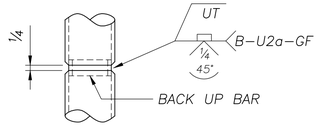


OPTIONAL SPLICE

(FOR WALL THK 5/16" OR GREATER ONLY)

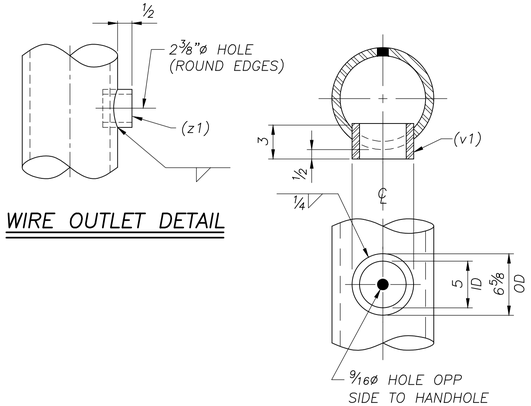


| VENT HOLE SIZES | |
|---|---|
| WEB MEMBER OD | HOLE DIA ± 1/4" |
| < 3.500 | 3/4 |
| 3.500 | 1 3/4 |
| 4.000 | 2 |
| 4.500 | 2 1/4 |
| 5.563 | 2 3/4 |
| 6.625 | 3 1/4 |

| PARTS PER CONT | PART MARK NO | NO OF PIECES REQ'D | SECTION SYM | DESCRIPTION OF MATERIAL | LENGTH FEET | LENGTH INCHES | PARTS FOR ONE UNIT | |
|---|---|---|---|---|---|---|---|---|
| | 86C1 | 1 | | UPRIGHT | | | | |
| | a | 2 | PIPE | 12.750 x .250 | 21 | 5 11/16 | | |
| | b | 1 | PIPE | 3.500 x .188 | 4 | 5 5/8 | | |
| | d | 4 | PIPE | 3.500 x .188 | 6 | 2 3/4 | | |
| | f | 1 | WT | 7 x 15 | 4 | 7 3/16 | | |
| | h | 2 | PL | 1 1/2 x 18 1/2 | 1 | 6 1/2 | | |
| | | | | | | | | |
| | 86C2 | 1 | | UPRIGHT | | | | |
| | aa | 2 | PIPE | 14.000 x .250 | 31 | 1 15/16 | | |
| | ab | 1 | PIPE | 3.500 x .188 | 4 | 4 3/8 | | |
| | ad | 5 | PIPE | 3.500 x .188 | 6 | 10 5/16 | | |
| | af | 1 | WT | 6 x 13 | 4 | 5 5/8 | | |
| | ah | 2 | PL | 1 3/4 x 19 | 1 | 7 | | |
| | v1 | 1 | PIPE | 6.625 x .864 | 0 | 3 | | |
| | z1 | 3 | OP | 1 1/4" FORGED HALF CPLG (3000#) | – | – | | |

C3546–86

NOTE:

SEE GENERAL NOTES DRAWING FOR MATERIAL SPECIFICATIONS, FOUNDATION AND STANDARD NOTES

REF DWG: E13

OH–12

AASHTO 6th Edition Spec's

SEALED BY:

SOUTH CAROLINA LICENSED PROFESSIONAL ENGINEER DAVID A LALLONE No. 38665

Oct 25 2023


walpar A valmont COMPANY

POST OFFICE BOX 28650
BIRMINGHAM ALABAMA 35228
4200 JEFFERSON AVENUE
BIRMINGHAM ALABAMA 35221
PHONE (205)–925–4990
FAX (205) 925–7273


| | |
|---|---|
| STATE: | South Carolina |
| FED PROJ: | Carolina Crossroads Phase 1 & 2 |
| ST PROJ: | P039718 |
| COUNTY: | Lexington & Richland |
| ROUTE: | I–26 & I–126 |
| SUBJECT: | OVERHEAD SIGN SUPPORT<br>DETAIL OF UPRIGHT |
| FOR: | Archer–United Joint Venture |
| DRAWN BY: | DLK DATE: 10/3/23 |
| CHECKED BY: | DLJ DATE: 10/16/23 |
| DWG NO: | C3546–86 |

| NO: | REVISIONS | DATE | MADE | CHECKED |
|---|---|---|---|---|
| 0 | CHECK COMPLETE | 10/16/23 | DLK | DLJ |

BTDPUDET

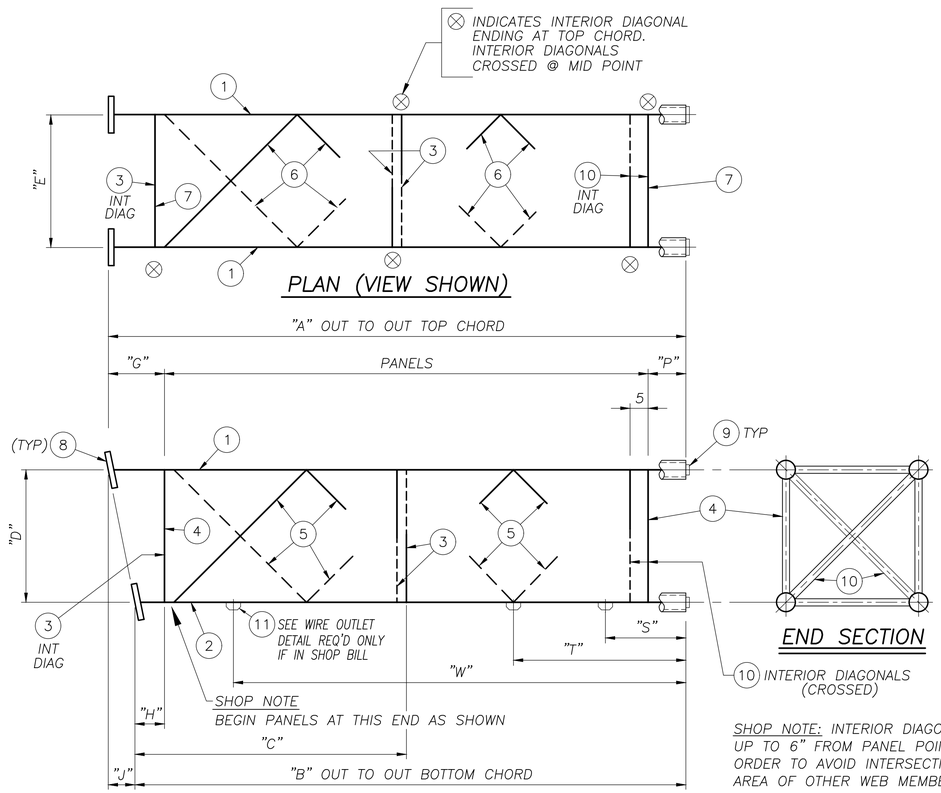


| MARK | QTY | VIEW | "A" | "B" | "C" | PANELS | "D" | "E" | | "G" | "H" |
|---|---|---|---|---|---|---|---|---|---|---|---|
| 87T1 | 1 | OPHAND | 29'–3 5/8 | 29'–3 3/8 | 12'–4 1/16 | 7 @ 3'–10 3/8(±) = 27'–0 1/2 | 3'–9 | 3'–3 | | 9 1/8 | 8 15/16 |
| 87T2 | 1 | SHOWN | 29'–3 5/8 | 29'–3 3/8 | 12'–4 1/16 | 7 @ 3'–10 3/8(±) = 27'–0 1/2 | 3'–9 | 3'–3 | | 9 1/8 | 8 15/16 |

| MARK | "J" | "K" | "L" | "M" | "N" | "P" | "R" | 1 | 2 | 3 | 4 | 5 | 6 | 7 | 8 | 9 | 10 | 11 | SHIM | SWEEP |
|---|---|---|---|---|---|---|---|---|---|---|---|---|---|---|---|---|---|---|---|---|
| 87T1 | 1/4 | 9 1/2 | 1/4 | 6 | 1 1/8 | 1'–6 | 4 5/8 | a | b | n | d | f | h | k | m | s | n | –– | 1/16 | 5/16 |
| 87T2 | 1/4 | 9 1/2 | 1/4 | 6 | 1 1/8 | 1'–6 | 4 5/8 | a | b | n | d | f | h | k | m | s | n | z1 | 1/16 | 5/16 |

WIRE OUTLET LOCATION CHART

| MARK | "S" | "T" | "W" |
|---|---|---|---|
| 87T1 | ------ | ------ | ------ |
| 87T2 | 1'–6 | ------ | ------ |

SHOP NOTE: INTERIOR DIAGONALS MAY BE OFFSET UP TO 6" FROM PANEL POINTS ON TRUSS IN ORDER TO AVOID INTERSECTING WELDS IN THE AREA OF OTHER WEB MEMBERS.

DO NOT OFFSET MEMBERS SO AS TO INTERFERE WITH BOLTED CONNECTIONS AT FIELD SPLICES.

| VENT HOLE SIZES | |
|---|---|
| WEB MEMBER (O.D.) | HOLE DIA. ± 1/4" |
| < 3.500 | 3/4 |
| 3.500 | 1 3/4 |
| 4.000 | 2 |
| 4.500 | 2 1/4 |
| 5.563 | 2 3/4 |
| 6.625 | 3 1/4 |

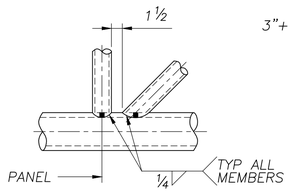


JOINT DETAIL

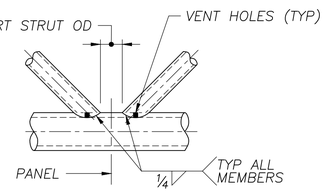


JOINT DETAIL

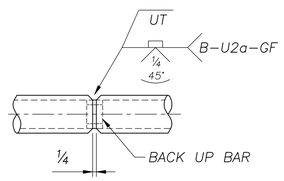


OPTIONAL CHORD SPLICE

(FOR WALL THK 5/16" OR GREATER ONLY)

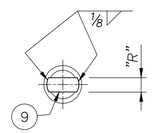


END CAP DETAIL

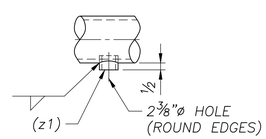


WIRE OUTLET DETAIL

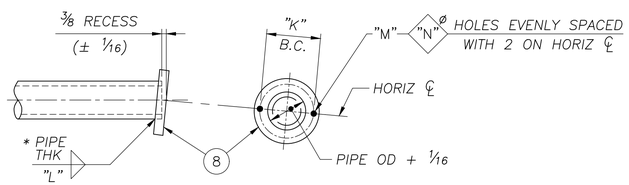


* NOTE: PIPE THK –1/16" FOR PIPE WALLS > 1/4"

FLANGE DETAIL

C3546–87

| PARTS PER CONT | PART MARK NO | NO. OF PIECES REQ'D | SECTION SYM | DESCRIPTION OF MATERIAL | LENGTH FEET | LENGTH INCHES | PARTS FOR ONE UNIT | |
|---|---|---|---|---|---|---|---|---|
| | 87T1 | 1 | | BOX TRUSS | | | | |
| | a | 2 | PIPE | 6.625 x .250 | 29 | 3 1/4 | | |
| | b | 2 | PIPE | 6.625 x .250 | 29 | 3 | | |
| | d | 4 | PIPE | 1.660 x .140 | 3 | 2 1/2 | | |
| | k | 4 | PIPE | 1.660 x .140 | 2 | 8 1/2 | | |
| | f | 14 | PIPE | 1.900 x .200 | 4 | 8 11/16 | | |
| | h | 14 | PIPE | 1.900 x .200 | 4 | 4 13/16 | | |
| | n | 5 | PIPE | 1.660 x .140 | 4 | 5 1/16 | | |
| | m | 4 | PL | 1 x 12 1/2 DIA. | – | – | | |
| | s | 4 | PL | 1/4 x 4 5/8 | 0 | 6 3/8 | | |
| | | | | | | | | |
| | 87T2 | 1 | | BOX TRUSS | | | | |
| | a | 2 | PIPE | 6.625 x .250 | 29 | 3 1/4 | | |
| | b | 2 | PIPE | 6.625 x .250 | 29 | 3 | | |
| | d | 4 | PIPE | 1.660 x .140 | 3 | 2 1/2 | | |
| | k | 4 | PIPE | 1.660 x .140 | 2 | 8 1/2 | | |
| | f | 14 | PIPE | 1.900 x .200 | 4 | 8 11/16 | | |
| | h | 14 | PIPE | 1.900 x .200 | 4 | 4 13/16 | | |
| | n | 5 | PIPE | 1.660 x .140 | 4 | 5 1/16 | | |
| | m | 4 | PL | 1 x 12 1/2 DIA. | – | – | | |
| | s | 4 | PL | 1/4 x 4 5/8 | 0 | 6 3/8 | | |
| | z1 | 1 | OP | 1 1/4" FORGED HALF CPLG (3000#) | – | – | | |

NOTE:

SEE GENERAL NOTES DRAWING FOR MATERIAL SPECIFICATIONS, FOUNDATION AND STANDARD NOTES

REF DWG: E13

OH–12

AASHTO 6th Edition Spec's

SEALED BY:

SOUTH CAROLINA PROFESSIONAL ENGINEER No. 38665 DAVID A LALLONE

Oct 25 2023


walpar A valmont COMPANY

POST OFFICE BOX 28650
BIRMINGHAM ALABAMA 35228
4200 JEFFERSON AVENUE
BIRMINGHAM ALABAMA 35221
PHONE (205)–925–4990
FAX (205) 925–7273


| | |
|---|---|
| STATE: | South Carolina |
| FED PROJ: | Carolina Crossroads Phase 1 & 2 |
| ST PROJ: | P039718 |
| COUNTY: | Lexington & Richland |
| ROUTE: | I–26 & I–126 |

SUBJECT: OVERHEAD SIGN SUPPORT
DETAIL OF TRUSS

FOR: Archer–United Joint Venture

DRAWN BY: DLK DATE: 10/3/23

CHECKED BY: DLJ DATE: 10/16/23

DWG NO: C3546–87

| NO: | REVISIONS | DATE | MADE | CHECKED |
|---|---|---|---|---|
| 0 | CHECK COMPLETE | 10/16/23 | DLK | DLJ |

BTESDET


NAME: E:\acad\JobsNPrg\3546\3546–87.dwg DATE: OCT 16, 2023 TIME: 4:25 AM dj706290

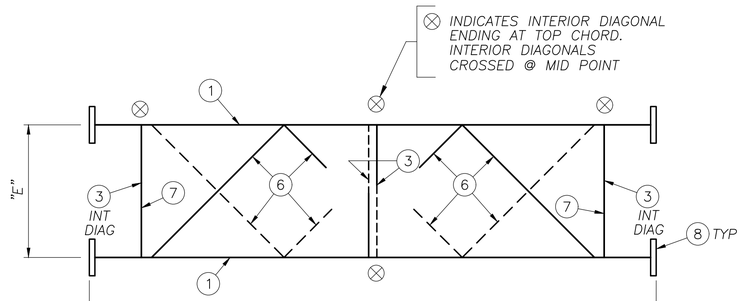


PLAN

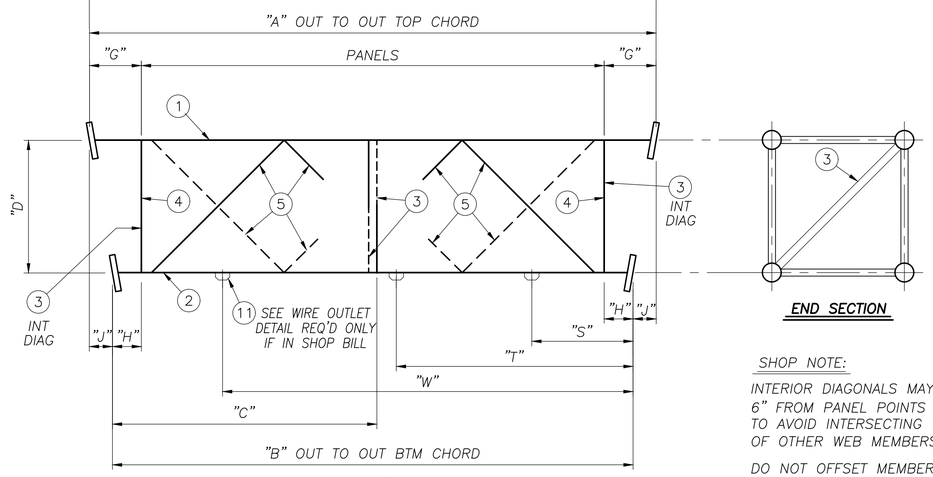


ELEVATION

TRUSS

| MARK | QTY | | "A" | "B" | "C" | PANELS | "D" | "E" | | "G" | "H" |
|---|---|---|---|---|---|---|---|---|---|---|---|
| 88T1 | 1 | | 32'–5¼ | 32'–4¾ | 16'–2½ | 8 @ 3'–10⅜(±) = 30'–11 | 3'–9 | 3'–3 | | 9⅛ | 8 15/16 |

| MARK | "J" | "K" | "L" | "M" | "N" | | | 1 | 2 | 3 | 4 | 5 | 6 | 7 | 8 | | | 11 | SHIM | SWEEP |
|---|---|---|---|---|---|---|---|---|---|---|---|---|---|---|---|---|---|---|---|---|
| 88T1 | ¼ | 9½ | ¼ | 6 | 1⅛ | | | a | b | n | d | f | h | k | m | | | z1 | 1/16 | 7/16 |




END SECTION

WIRE OUTLET LOCATION CHART

| MARK | "S" | "T" | "W" |
|---|---|---|---|
| 88T1 | 20'–0⅞ | ------ | ------ |

SHOP NOTE:

INTERIOR DIAGONALS MAY BE OFFSET UP TO 6" FROM PANEL POINTS ON TRUSS IN ORDER TO AVOID INTERSECTING WELDS IN THE AREA OF OTHER WEB MEMBERS.

DO NOT OFFSET MEMBERS SO AS TO INTERFERE WITH BOLTED CONNECTIONS AT FIELD SPLICES.

C3546–88

| PARTS PER CONT | PART MARK NO | NO. OF PIECES REQ'D | SECTION SYM | DESCRIPTION OF MATERIAL | LENGTH FEET | LENGTH INCHES | PARTS FOR ONE UNIT | |
|---|---|---|---|---|---|---|---|---|
| | 88T1 | 1 | | BOX TRUSS | | | | |
| | a | 2 | PIPE | 6.625 x .250 | 32 | 4½ | | |
| | b | 2 | PIPE | 6.625 x .250 | 32 | 4 | | |
| | d | 4 | PIPE | 1.660 x .140 | 3 | 2½ | | |
| | k | 4 | PIPE | 1.660 x .140 | 2 | 8½ | | |
| | f | 16 | PIPE | 1.900 x .200 | 4 | 8 11/16 | | |
| | h | 16 | PIPE | 1.900 x .200 | 4 | 4 3/16 | | |
| | n | 4 | PIPE | 1.660 x .140 | 4 | 5 1/16 | | |
| | m | 8 | PL | 1 x 12½ DIA. | – | – | | |
| | z1 | 1 | OP | 1¼" FORGED HALF CPLG (3000#) | – | – | | |
| | | | | | | | | |

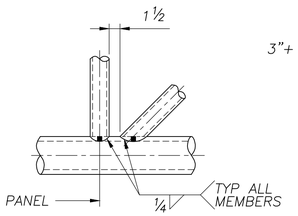


JOINT DETAIL

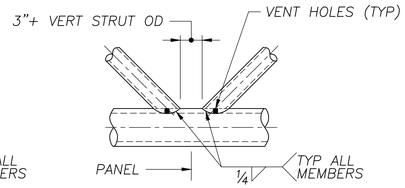


JOINT DETAIL

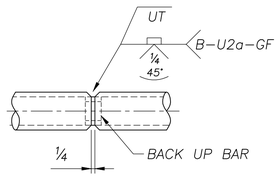


OPTIONAL CHORD SPLICE

(FOR WALL THK 5/16" OR GREATER ONLY)

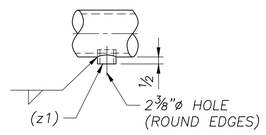


WIRE OUTLET DETAIL

| VENT HOLE SIZES | |
|---|---|
| WEB MEMBER OD | HOLE DIA. ± ¼" |
| < 3.500 | ¾ |
| 3.500 | 1¾ |
| 4.000 | 2 |
| 4.500 | 2¼ |
| 5.563 | 2¾ |
| 6.625 | 3¼ |

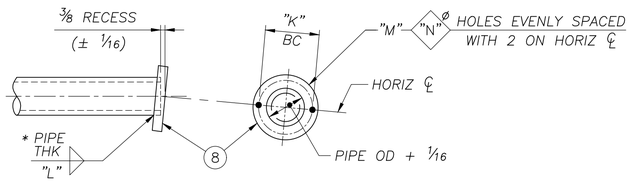


FLANGE DETAIL

*NOTE: PIPE THK –1/16" FOR PIPE WALLS > ¼"

NOTE:

SEE GENERAL NOTES DRAWING FOR MATERIAL SPECIFICATIONS, FOUNDATION AND STANDARD NOTES

REF DWG: E13

AASHTO 6th Edition Spec's

OH–12

SEALED BY:

SOUTH CAROLINA PROFESSIONAL ENGINEER
No. 38665
DAVID A LALLONE

Oct 25 2023

walpar
A valmont COMPANY

POST OFFICE BOX 28650
BIRMINGHAM ALABAMA 35228
4200 JEFFERSON AVENUE
BIRMINGHAM ALABAMA 35221
PHONE (205)–925–4990
FAX (205) 925–7273

STATE: South Carolina
FED PROJ: Carolina Crossroads Phase 1 & 2
ST PROJ: P039718
COUNTY: Lexington & Richland
ROUTE: I–26 & I–126

SUBJECT: OVERHEAD SIGN SUPPORT
DETAIL OF TRUSS
FOR: Archer–United Joint Venture

DRAWN BY: DLK DATE: 10/3/23
CHECKED BY: DLJ DATE: 10/16/23
DWG NO: C3546–88

| NO: | REVISIONS | DATE | MADE | CHECKED |
|---|---|---|---|---|
| 0 | CHECK COMPLETE | 10/16/23 | DLK | DLJ |

BTCSDET

NAME: E:\acad\JobsNPrg\3546\3546–88.dwg DATE: OCT 16, 2023 TIME: 4:24 AM dj706290

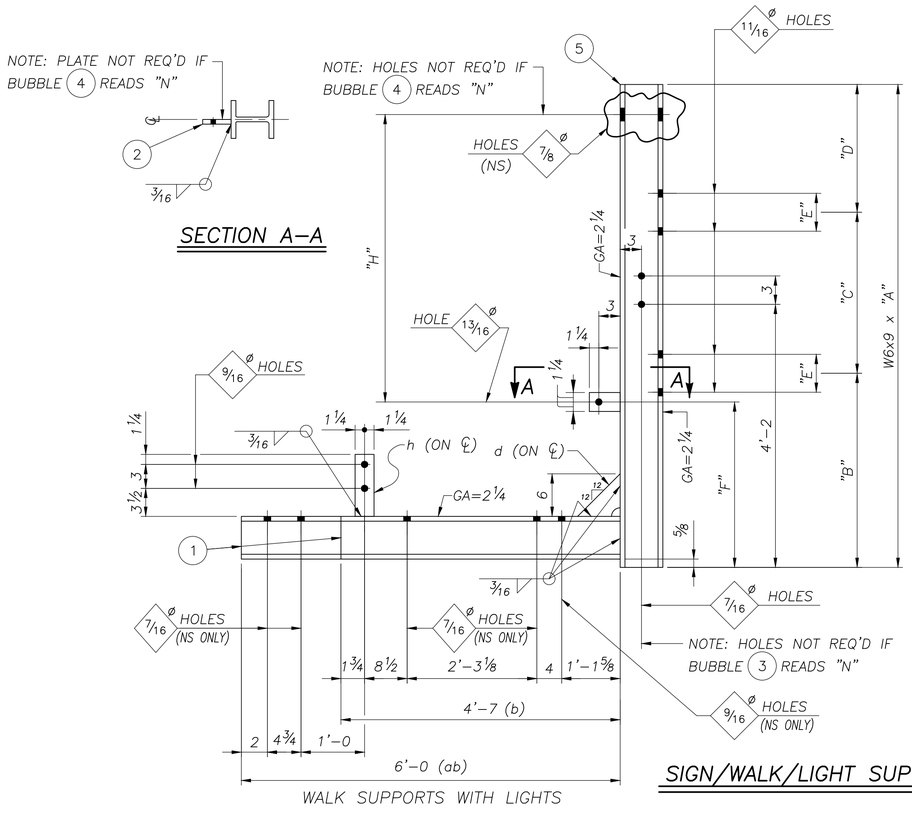


WALK SUPPORTS WITH LIGHTS

## SIGN/WALK/LIGHT SUPPORTS

| MARK | QTY | "A" | "B" | "C" | "D" | "E" | "F" | "H" | 1 | 2 | 3 | 4 | 5 |
|---|---|---|---|---|---|---|---|---|---|---|---|---|---|
| 89S1 | 3 | 13'–3½ | 9'–0½ | 3'–9 | 6 | 7¼ | ---- | ---- | b | – | N | N | a |
| 89S2 | 2 | 13'–4 | 9'–0½ | 3'–9 | 6½ | 7¼ | 2'–3¼ | 9'–11½ | ab | f | Y | Y | aa |
| 89S3 | 5 | 13'–4 | 9'–0½ | 3'–9 | 6½ | 7¼ | 2'–3¼ | 9'–11½ | ab | f | N | Y | ba |

1

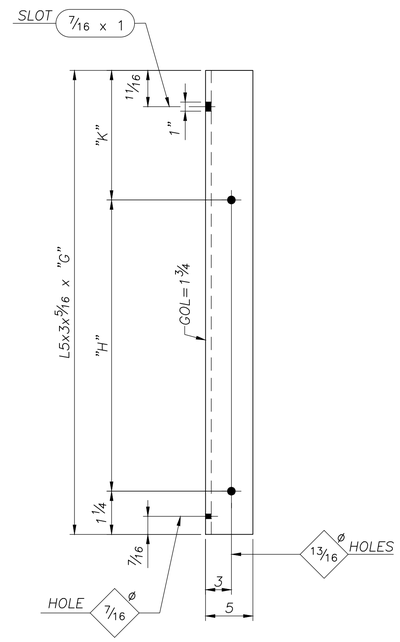


## SIGN HANGERS

| MARK | QTY | "G" | "H" | "K" |
|---|---|---|---|---|
| 89H1 | 7 | 17'–6¼ | 9'–11½ | 7'–5½ |

| PARTS PER CONT | PART MARK NO | NO OF PIECES REQ'D | SECTION SYM | DESCRIPTION OF MATERIAL | LENGTH FEET | LENGTH INCHES | PARTS FOR ONE UNIT | |
|---|---|---|---|---|---|---|---|---|
| | 89S1 | 3 | | WALK SUPPORTS | | | | |
| | a | 3 | W | 6 x 9 | 13 | 3½ | | |
| | b | 3 | W | 6 x 9 | 4 | 7 | | |
| | d | 3 | PL | 1/4 x 6 | 0 | 6 | | |
| | h | 3 | PL | 1/2 x 2 1/2 | 0 | 7¾ | | |
| | 89S2 | 2 | | SIGN/WALK/LIGHT SUPPORTS | | | | |
| | aa | 2 | W | 6 x 9 | 13 | 4 | | |
| | ab | 2 | W | 6 x 9 | 6 | 0 | | |
| | d | 2 | PL | 1/4 x 6 | 0 | 6 | | |
| | f | 2 | PL | 3/8 x 2 1/2 | 0 | 4¼ | | |
| | h | 2 | PL | 1/2 x 2 1/2 | 0 | 7¾ | | |
| | 89S3 | 5 | | SIGN/WALK/LIGHT SUPPORTS | | | | |
| | ba | 5 | W | 6 x 9 | 13 | 4 | | |
| | ab | 5 | W | 6 x 9 | 6 | 0 | | |
| | d | 5 | PL | 1/4 x 6 | 0 | 6 | | |
| | f | 5 | PL | 3/8 x 2 1/2 | 0 | 4¼ | | |
| | h | 5 | PL | 1/2 x 2 1/2 | 0 | 7¾ | | |
| | | | | | | | | |
| | 89H1 | 7 | | SIGN HANGERS | | | | |
| | k | 7 | L | 5 x 3 x 5/16 | 17 | 6¼ | | |

C3546–89

**NOTE:**
SEE GENERAL NOTES DRAWING FOR MATERIAL SPECIFICATIONS, FOUNDATION AND STANDARD NOTES

REF DWGS: E13

OH–12

AASHTO 6th Edition Spec's

SEALED BY:

SOUTH CAROLINA PROFESSIONAL ENGINEER DAVID A LALLONE No. 38665

Feb 7 2024

| NO: | REVISIONS | DATE | MADE | CHECKED |
|---|---|---|---|---|
| 1 | CORRECTED "H" DIMENSION | 2/6/24 | DLK | DLJ |


walpar
A valmont COMPANY
POST OFFICE BOX 28650
BIRMINGHAM ALABAMA 35228
4200 JEFFERSON AVENUE
BIRMINGHAM ALABAMA 35221
PHONE (205)–925–4990
FAX (205) 925–7273


1

STATE: South Carolina
FED PROJ: Carolina Crossroads Phase 1 & 2
ST PROJ: P039718
COUNTY: Lexington & Richland
ROUTE: I–26 & I–126

SUBJECT: SIGN SUPPORT
WALK SUPPORT & SIGN HANGER DETAILS

FOR: Archer–United Joint Venture

DRAWN BY: DLK DATE: 10/3/23
CHECKED BY: DLJ DATE: 10/16/23

DWG NO: C3546–89

SH–DET4


NAME: E:\acad\JobsNProg\3546\3546–89.dwg DATE: FEB 06, 2024 TIME: 1:38 PM dj706290

C3546–90
SOUTH CAROLINA

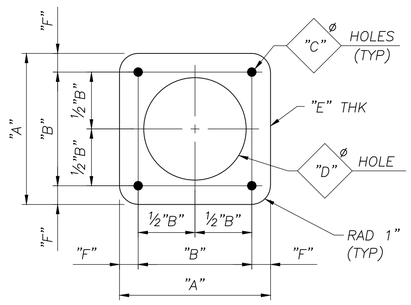


TYPE "AA"
(SEE CHART FOR INFORMATION)

## ANCHOR TEMPLATE CHART (ALL DIMENSIONS IN INCHES)

| MARK | QTY | TYPE | "A" | "B" | "C" | "D" | "E" | "F" |
|---|---|---|---|---|---|---|---|---|
| 90P1 | 4 | AA | 22 | 18 | 1⅞ | 18 | ¼ | 2 |
| 90P2 | 4 | AA | 24 | 20 | 1⅞ | 20 | ¼ | 2 |

**NOTE:**
THREADS (ROLLED OR CUT) FOR "H" NUT

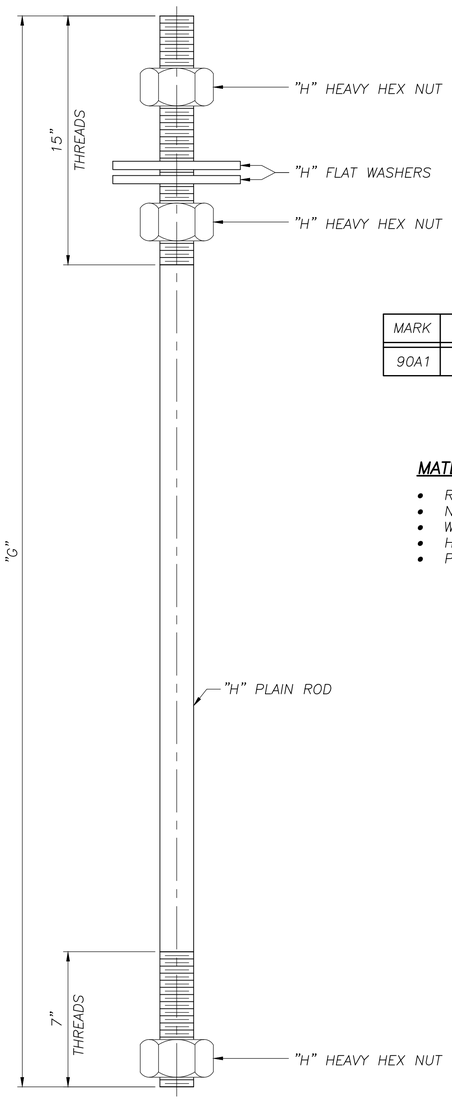


## ~ ANCHOR BOLTS ~

| MARK | "G" | "H"ø | (TPI) | ROD QTY | NUT QTY | FW QTY | |
|---|---|---|---|---|---|---|---|
| 90A1 | 4'–6 | 1¾ | 5 | 16 | 48 | 32 | |

**MATERIAL SPECS:**

- RODS – ASTM F1554, GRADE 55, S1
- NUTS – ASTM A563,GR.DH OR ASTM A194,GR.2H
- WASHERS – ASTM F436
- HARDWARE – GALV PER ASTM–A153
- PLAIN ROD – GALV FULL LENGTH PER ASTM–A153

C3546–90

| PARTS PER CONT | PART MARK NO | NO OF PIECES REQ'D | SECTION SYM | DESCRIPTION OF MATERIAL | LENGTH FEET | LENGTH INCHES | PARTS FOR ONE UNIT | |
|---|---|---|---|---|---|---|---|---|
| | 90P1 | 4 | | ANCHOR TEMPLATES | | | | |
| | a | 4 | PL | ¼ x 22 | 1 | 10 | | |
| | 90P2 | 4 | | ANCHOR TEMPLATES | | | | |
| | aa | 4 | PL | ¼ x 24 | 2 | 0 | | |

SHIPPING LIST

| QTY | MARK | DESCRIPTION |
|---|---|---|
| 4 | 90P1 | ANCHOR TEMPLATES |
| 4 | 90P2 | ANCHOR TEMPLATES |
| 16 | 90A1 | ANCHOR BOLTS |

## NOTE: SHOP SHIP FROM THIS DRAWING

**NOTE:**
DO NOT GALVANIZE TEMPLATES

**NOTE:**
SEE GENERAL NOTES DRAWING FOR MATERIAL SPECIFICATIONS, FOUNDATION AND STANDARD NOTES

REF DWG: E14

OH–20

AASHTO 6th Edition Spec's

SEALED BY:

SOUTH CAROLINA PROFESSIONAL ENGINEER
No. 38665
DAVID A LALLOUE

Oct 25 2023


walpar
A valmont COMPANY
POST OFFICE BOX 28650
BIRMINGHAM ALABAMA 35228
4200 JEFFERSON AVENUE
BIRMINGHAM ALABAMA 35221
PHONE (205)–925–4990
FAX (205) 925–7273


| NO: | REVISIONS | DATE | MADE | CHECKED |
|---|---|---|---|---|
| 0 | CHECK COMPLETE | 10/16/23 | DLK | DLJ |

STATE: South Carolina
FED PROJ: Carolina Crossroads Phase 1 & 2
ST PROJ: P039718
COUNTY: Lexington & Richland
ROUTE: I–26 & I–126

SUBJECT: SIGN STRUCTURE
ANCHOR TEMPLATE & SOLE PLATE DETAILS
FOR: Archer–United Joint Venture

DRAWN BY: DLK DATE: 10/4/23
CHECKED BY: DLJ DATE: 10/16/23
DWG NO: C3546–90

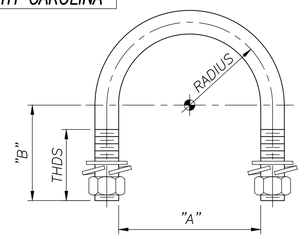


**NOTE 1:**
- UBOLT MATERIAL PROPERTIES TO MEET OR EXCEED A307
- GALV PER A153

**NOTE 2:**
- UBOLT MATERIAL PROPERTIES TO MEET OR EXCEED A307
- ZINC PL PER B633

## ~ U-BOLTS w/(2ea) HN/LW/FW ~

NUTS: ASTM A563,GR.DH OR ASTM A194,GR.2H
WASHERS: ASTM F436 & ANSI-B18.21.1

| MARK | QTY | DIA | "A" | "B" | RADIUS | THDS | MATERIAL |
|---|---|---|---|---|---|---|---|
| U1 | 12 | 5/16 | 1 11/16 | 1 5/8 | 1 | 1 1/4 | NOTE 2 |
| U4 | 36 | 1/2 | 4 5/8 | 4 1/4 | 2 3/16 | 2 | NOTE 1 |

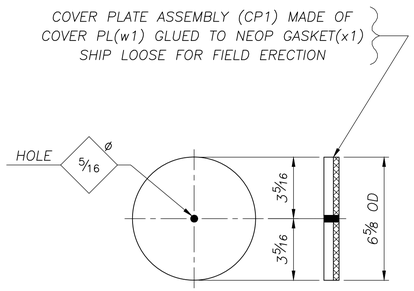


## 2 ~ COVER PLATE ASSEMBLY ~ CP1

| PART MARK NO. | NO OF PIECES REQ'D | SECTION SYM | DESCRIPTION OF MATERIAL | LENGTH FEET | LENGTH INCHES | PARTS FOR ONE UNIT |
|---|---|---|---|---|---|---|
| CP1 | 2 | | COVER PLATE ASSEMBLY | | | |
| w1 | 2 | PL | 1/4 x 6 5/8 DIA. (GALV A123) | – | – | 1 |
| x1 | 2 | OP | 1/8 x 6 5/8 DIA. (NEOP GASKET) | – | – | 1 |

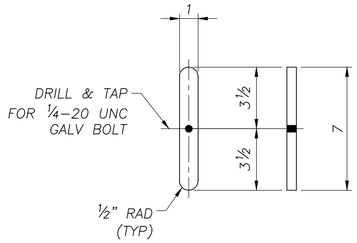


## 2 ~ HANDHOLE BAR ~ HB1

| PART MARK NO. | NO OF PIECES REQ'D | SECTION SYM | DESCRIPTION OF MATERIAL | LENGTH FEET | LENGTH INCHES | PARTS FOR ONE UNIT |
|---|---|---|---|---|---|---|
| HB1 | 2 | | HANDHOLE BAR | | | |
| w2 | 2 | PL | 1/4 x 1 (GALV A123) | 0 | 7 | 1 |

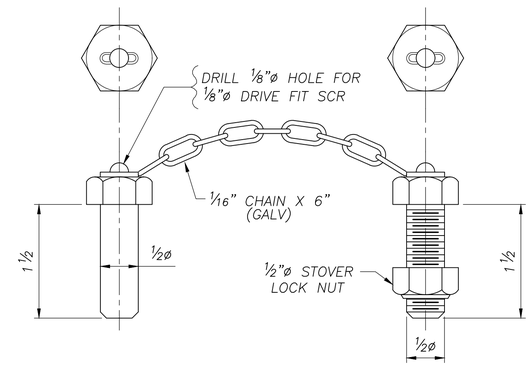


## 6 ~ HINGE PIN ASSEMBLY ~ 91P1

MAT'L SPECS: ASTM A307 (ZINC PL UN)

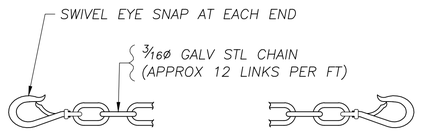


## ~ SAFETY CHAIN ~

| MARK | QTY | LENGTH |
|---|---|---|
| 91S1 | 2 | 4'-6 |

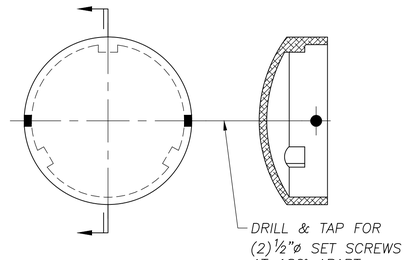


## ~ POLE CAPS ~

(ALUM 356-F) (ASTM B26, A356)

| MARK | QTY | PART No | REMARKS |
|---|---|---|---|
| C18 | 2 | 390 | 18ø PIPE |
| C20 | 2 | 394 | 20ø PIPE |

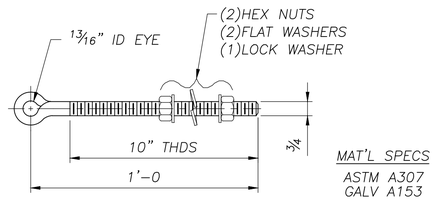


MAT'L SPECS
ASTM A307
GALV A153

## 5 ~ EYE BOLT ASSEMBLY ~ 91M1

NUTS: ASTM A563,GR.DH OR ASTM A194,GR.2H
WASHERS: ASTM F436 & ANSI-B18.21.1

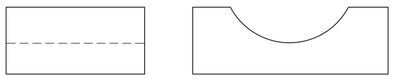

## ~ SADDLE SHIM DETAIL ~

(ALUM 356-T6)

| MARK | QTY | PART No | REMARKS |
|---|---|---|---|
| S4 | 4 | 350 | FOR 4 1/2 |

**NOTE:**
SEE GENERAL NOTES DRAWING FOR MATERIAL SPECIFICATIONS, FOUNDATION AND STANDARD NOTES

REF DWGS: E14

OH-20

AASHTO 6th Edition Spec's

SEALED BY:

SOUTH CAROLINA PROFESSIONAL ENGINEER
No. 38665
DAVID A LALLIONE

Oct 25 2023

walpar
A valmont COMPANY
POST OFFICE BOX 28650
BIRMINGHAM ALABAMA 35228
4200 JEFFERSON AVENUE
BIRMINGHAM ALABAMA 35221
PHONE (205)-925-4990
FAX (205) 925-7273

| NO: | REVISIONS | DATE | MADE | CHECKED |
|---|---|---|---|---|
| 0 | CHECK COMPLETE | 10/16/23 | DLK | DLJ |

STATE: South Carolina
FED PROJ: Carolina Crossroads Phase 1 & 2
ST PROJ: P039718
COUNTY: Lexington & Richland
ROUTE: I-26 & I-126

SUBJECT: SIGN STRUCTURES
MISC DETAILS
FOR: Archer-United Joint Venture

DRAWN BY: DLK DATE: 10/4/23
CHECKED BY: DLJ DATE: 10/16/23
DWG NO: C3546-91

KITDWG3

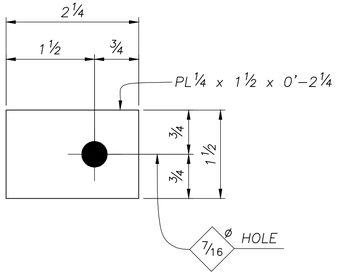


## 12 ~ CLAMP PLATES ~ 92M1

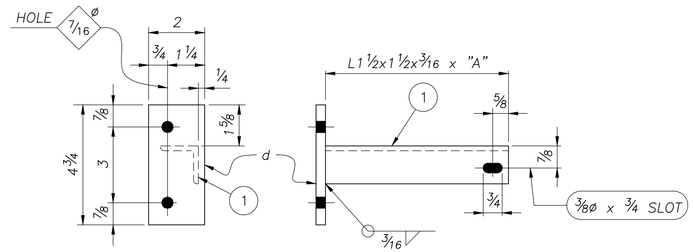


## ~ SAFETY CHAIN SUPPORT ~

(SEE CHART)

| MARK | QTY | "A" | (1) |
|---|---|---|---|
| 92M3 | 2 | 3'-0 | f |

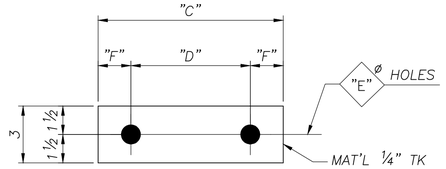


## ~ SHIMS ~

| MARK | QTY | "C" | "D" | "E" | "F" |
|---|---|---|---|---|---|
| 92S1 | 4 | 7 3/8 | 5 1/8 | 11/16 | 1 1/8 |

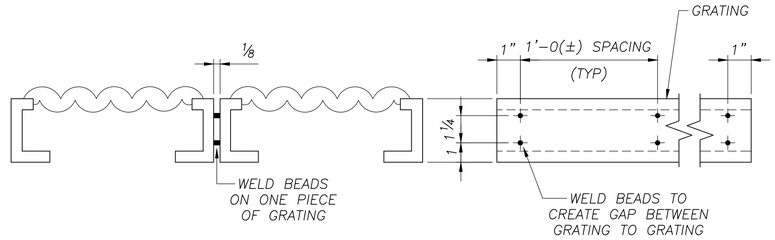


## GRATING GAP DETAIL

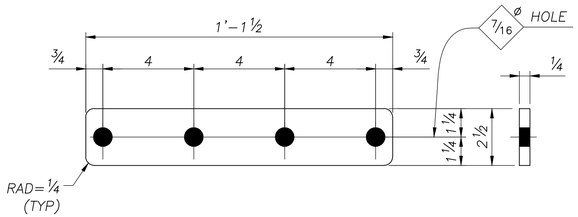


## 2 ~ SPLICE PLATES ~ 92M2

(FOR GRATING)

## SHOP NOTE:

GRATING TO BE "GRIP STRUT", OR EQUAL SAFETY GRATING 3" DEEP, FORMED FROM 12 GA SHEETS GALV AFTER FAB WELDED TOGETHER IN A COMBINATION OF THESE SIZES
(1) #8 DIAMOND 18 3/4" WIDE – CAT# 83012 AND
(1) #5 DIAMOND 11 3/4" WIDE – CAT# 53012

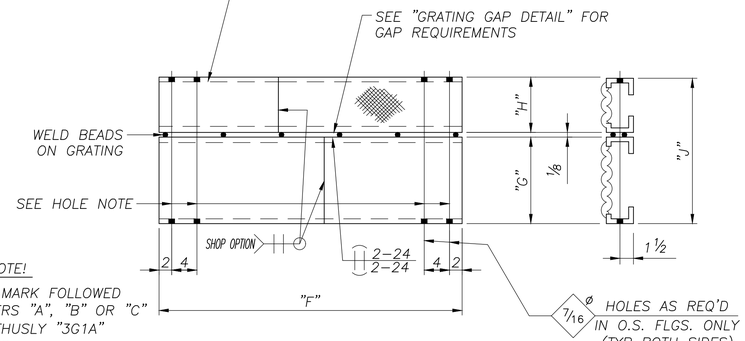


HOLE NOTE!

GRATING MARK FOLLOWED BY LETTERS "A", "B" OR "C" SHOWN THUSLY "3G1A" DESIGNATE:
"A" – NO HOLES
"B" – HOLES 1–END
"C" – HOLES BOTH ENDS

## ~ GRATING ~

(SEE CHART)

| MARK | QTY | "F" | "G" | "H" | "J" |
|---|---|---|---|---|---|
| 92G1B | 2 | 15'-9 | 1'-6 3/4 | 11 3/4 | 2'-6 5/8 |

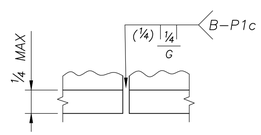


## TOE ANGLE SPLICE

( OPTIONAL )

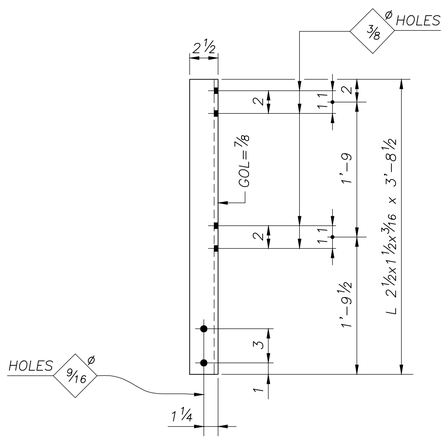


## 6 ~ HANDRAIL POSTS ~ 92P1

(ALUMINUM)

## NOTE:

SEE GENERAL NOTES DRAWING FOR MATERIAL SPECIFICATIONS, FOUNDATION AND STANDARD NOTES

REF DWG: E14

AASHTO 6th Edition Spec's

OH–20

C3546–92

| PARTS PER CONT | PART MARK NO | NO OF PIECES REQ'D | SECTION SYM | DESCRIPTION OF MATERIAL | LENGTH FEET | LENGTH INCHES | PARTS FOR ONE UNIT | |
|---|---|---|---|---|---|---|---|---|
| | 92M1 | 12 | | CLAMP PLATES | | | | |
| | a | 12 | PL | 1/4 x 1 1/2 | 0 | 2 1/4 | | |
| | 92M2 | 2 | | SPLICE PLATES | | | | |
| | b | 2 | PL | 1/4 x 2 1/2 | 1 | 1 1/2 | | |
| | 92M3 | 2 | | SAFETY CHAIN SUPPORT | | | | |
| | d | 2 | PL | 1/4 x 2 | 0 | 4 3/4 | | |
| | f | 2 | L | 1 1/2 x 1 1/2 x 3/16 | 3 | 0 | | |
| | 92G1B | 2 | | GRATING | | | | |
| | g | 2 | GRT | 18 3/4 WIDE | 15 | 9 | | |
| | n | 2 | GRT | 11 3/4 WIDE | 15 | 9 | | |
| | 92P1 | 6 | | HANDRAIL POSTS | | | | |
| | h | 6 | ALL | 2 1/2 x 1 1/2 x 3/16 (ALUM 6061) | 3 | 8 1/2 | | |
| | 92R1 | 6 | | HANDRAIL | | | | |
| | k | 6 | ALPI | 1.660 x .140 (ALUM 6061) | 10 | 6 | | |
| | 92A1 | 1 | | SAFETY ANGLE | | | | |
| | m | 1 | L | 4 x 3 x 1/4 | 31 | 6 | | |
| | 92L1 | 2 | | LIGHTING SUPPORTS (ALUM 6063-T6) | | | | |
| | p | 2 | ALUN | UNISTRUT 1 5/8 x 1 5/8 x .105 | 15 | 0 | | |
| | 92L2 | 2 | | LIGHTING SUPPORTS (ALUM 6063-T6) | | | | |
| | ap | 2 | ALUN | UNISTRUT 1 5/8 x 1 5/8 x .105 | 10 | 6 | | |
| | 92S1 | 4 | | SHIMS | | | | |
| | s | 4 | PL | 1/4 x 3 | 0 | 7 3/8 | | |

SEALED BY:

SOUTH CAROLINA PROFESSIONAL ENGINEER
No. 38665
DAVID A LALLONE

Oct 25 2023

| NO: | REVISIONS | DATE | MADE | CHECKED |
|---|---|---|---|---|
| 0 | CHECK COMPLETE | 10/16/23 | DLK | DLJ |


walpar
A valmont COMPANY
POST OFFICE BOX 28650
BIRMINGHAM ALABAMA 35228
4200 JEFFERSON AVENUE
BIRMINGHAM ALABAMA 35221
PHONE (205)-925-4990
FAX (205) 925-7273


STATE: South Carolina
FED PROJ: Carolina Crossroads Phase 1 & 2
ST PROJ: P039718
COUNTY: Lexington & Richland
ROUTE: I-26 & I-126

SUBJECT: SIGN STRUCTURE
MISC DETAILS
FOR: Archer–United Joint Venture

DRAWN BY: DLK DATE: 10/4/23
CHECKED BY: DLJ DATE: 10/16/23
DWG NO: C3546-92

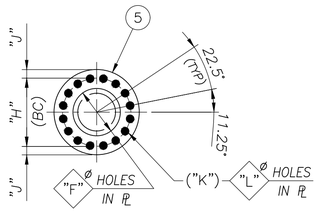


| MARK | QTY | "A" | "B" | "C" | "D" | "E" | "F" | "G" |
|---|---|---|---|---|---|---|---|---|
| 93C1 | 1 | 36'-6¼ | 5'-9 | 1'-6 | 2½ | 2 | 1'-6 1/16 | 5/16 |
| 93C2 | 1 | 41'-1¼ | 5'-9 | 1'-8 | 2½ | 2 | 1'-8 1/16 | 5/16 |

△1

| MARK | "H" | "J" | "K" | "L" | | 1 | 2 | 3 | 4 | 5 |
|---|---|---|---|---|---|---|---|---|---|---|
| 93C1 | 1'-9 | 1½ | 16 | 1⅛ | | a | b | d | f | h |
| 93C2 | 1'-11 | 1½ | 16 | 1⅛ | | aa | ab | ad | af | ah |

| MARK | "AA" | "BB" | "DD" | PANELS |
|---|---|---|---|---|
| 93C1 | *8½ | 3½ | 7½ | 6 @ 5'-9 1/16(±) = 34'-6¼ |
| 93C2 | *9½ | 3¾ | 8½ | 7 @ 5'-6 11/16(±) = 38'-10¾ |

**SHOP NOTE:**

* NOT TYPICAL DIMENSION

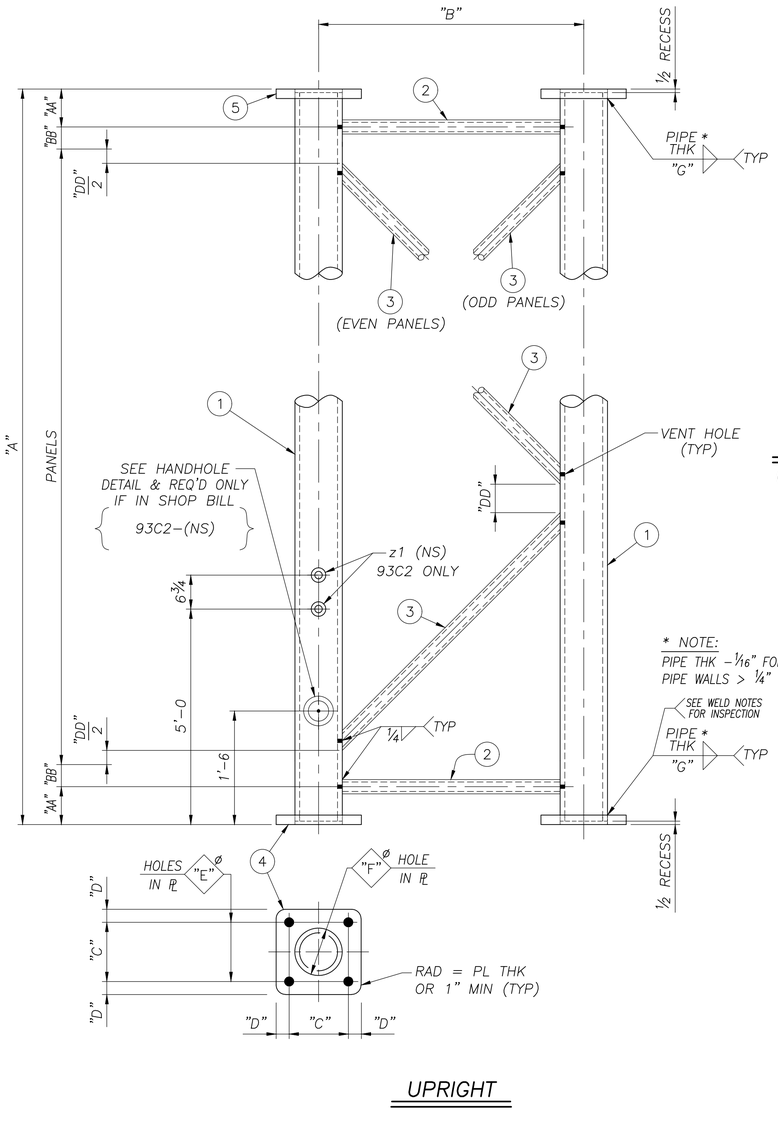


**UPRIGHT**




**OPTIONAL SPLICE**

(FOR WALL THK 5/16" OR GREATER ONLY)

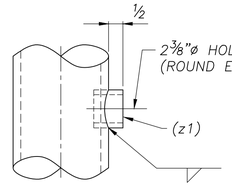


**WIRE OUTLET DETAIL**

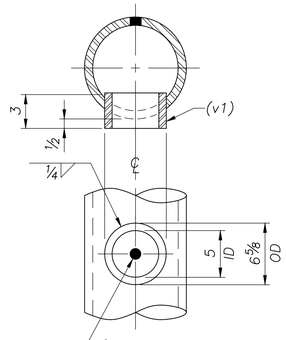


**HANDHOLE DETAIL**

| VENT HOLE SIZES | |
|---|---|
| WEB MEMBER OD | HOLE DIA ± ¼" |
| < 3.500 | ¾ |
| 3.500 | 1¾ |
| 4.000 | 2 |
| 4.500 | 2¼ |
| 5.563 | 2¾ |
| 6.625 | 3¼ |

**NOTE:**

SEE GENERAL NOTES DRAWING FOR MATERIAL SPECIFICATIONS, FOUNDATION AND STANDARD NOTES

REF DWG: E14

C3546-93

| PARTS PER CONT | PART MARK NO | NO OF PIECES REQ'D | SECTION SYM | DESCRIPTION OF MATERIAL | LENGTH FEET | LENGTH INCHES | PARTS FOR ONE UNIT | |
|---|---|---|---|---|---|---|---|---|
| | 93C1 | 1 | | UPRIGHT STUB | | | | |
| | a | 2 | PIPE | 18.000 x .250 | 36 | 5¼ | | |
| | b | 2 | PIPE | 4.500 x .188 | 4 | 3½ | | |
| | d | 6 | PIPE | 4.500 x .188 | 6 | 7⅞ | | |
| | f | 2 | PL | 2 x 23 | 1 | 11 | | |
| | h | 2 | PL | 1¼ x 24 DIA. | – | – | | |
| | | | | | | | | |
| | 93C2 | 1 | | UPRIGHT STUB | | | | |
| | aa | 2 | PIPE | 20.000 x .250 | 41 | 0¼ | | |
| | ab | 2 | PIPE | 5.563 x .188 | 4 | 1 1/16 | | |
| | ad | 7 | PIPE | 5.563 x .188 | 6 | 4 1/16 | | |
| | af | 2 | PL | 2 x 25 | 2 | 1 | | |
| | ah | 2 | PL | 1¼ x 26 DIA. | – | – | | |
| | v1 | 1 | PIPE | 6.625 x .864 | 0 | 3 | | |
| | z1 | 2 | OP | 1¼" FORGED HALF CPLG (3000#) | – | – | | |

OH-20

AASHTO 6th Edition Spec's

SEALED BY:




Feb 7 2024

walpar
A valmont COMPANY

POST OFFICE BOX 28650
BIRMINGHAM ALABAMA 35228
4200 JEFFERSON AVENUE
BIRMINGHAM ALABAMA 35221
PHONE (205)-925-4990
FAX (205) 925-7273

STATE: South Carolina
FED PROJ: Carolina Crossroads Phase 1 & 2
ST PROJ: P039718
COUNTY: Lexington & Richland
ROUTE: I-26 & I-126

SUBJECT: OVERHEAD SIGN SUPPORT
DETAIL OF UPRIGHT STUB
FOR: Archer-United Joint Venture

DRAWN BY: DLK DATE: 10/4/23
CHECKED BY: DLJ DATE: 10/16/23
DWG NO: C3546-93

| NO: | REVISIONS | DATE | MADE | CHECKED |
|---|---|---|---|---|
| 1 | CORRECTED "E" DIMENSION | 2/6/24 | --- | DLJ |

BTDPUDET

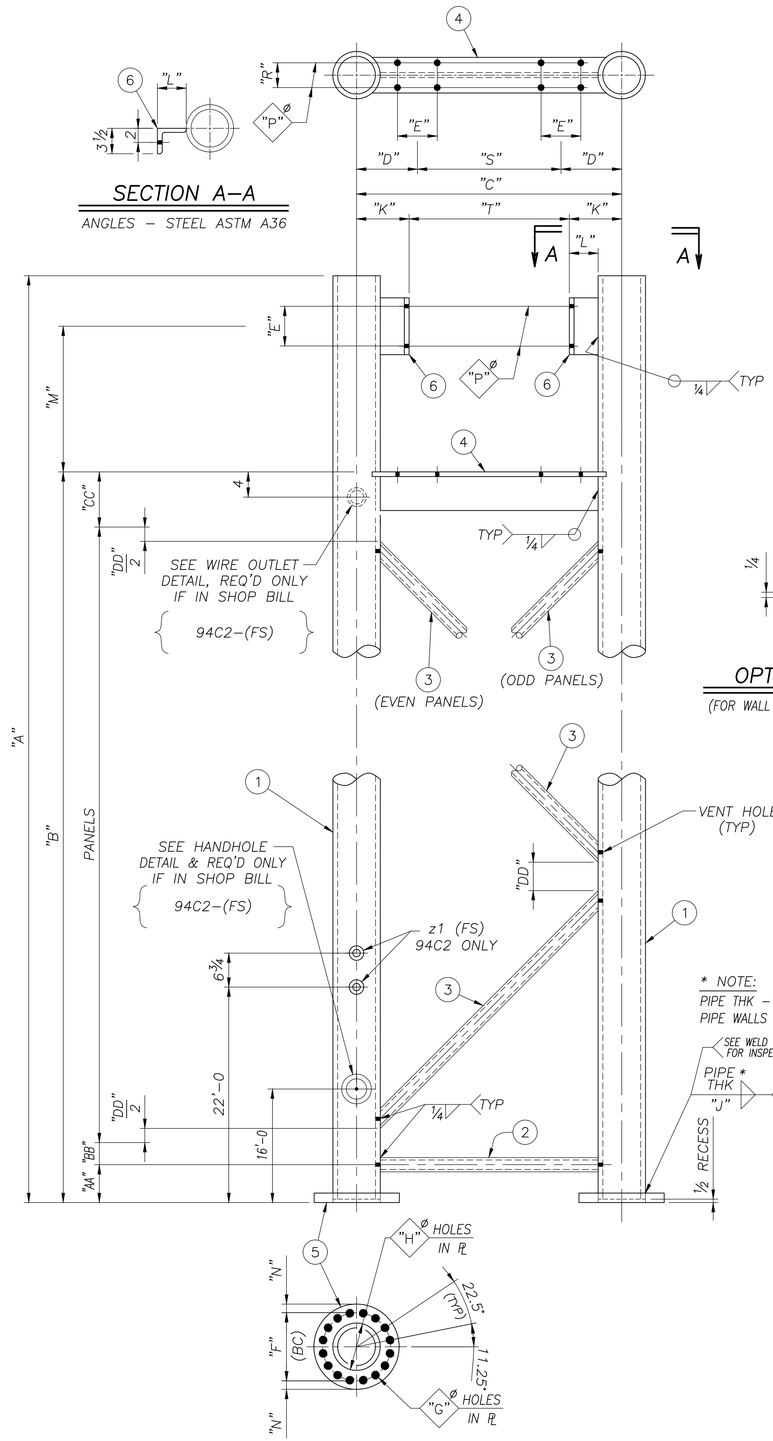


UPRIGHT

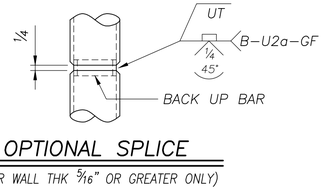


OPTIONAL SPLICE

(FOR WALL THK 5/16" OR GREATER ONLY)

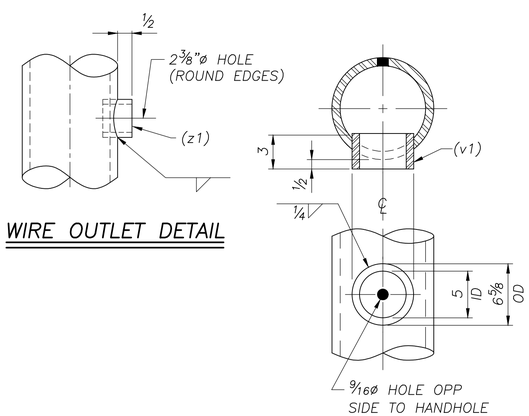


WIRE OUTLET DETAIL

HANDHOLE DETAIL

| MARK | QTY | "A" | "B" | "C" | PANELS | "D" | "E" | "F" | "G" |
|---|---|---|---|---|---|---|---|---|---|
| 94C1 | 1 | 41'–1 3/4 | 36'–6 | 5'–9 | 6 @ 5'–9 1/16(±) = 34'–6 1/4 | 1'–3 | 5 1/8 | 1'–9 | 1 1/8 |
| 94C2 | 1 | 40'–0 1/2 | 35'–4 3/4 | 5'–9 | 6 @ 5'–6 11/16(±) = 33'–4 1/16 | 1'–3 | 5 1/8 | 1'–11 | 1 1/8 |

| MARK | "H" | "J" | "K" | "L" | "M" | "N" | "P" | "R" | "S" | "T" | 1 | 2 | 3 | 4 | 5 | 6 | |
|---|---|---|---|---|---|---|---|---|---|---|---|---|---|---|---|---|---|
| 94C1 | 1'–6 1/16 | 5/16 | 12 3/8 | 3 3/8 | 3'–11 3/4 | 1 1/2 | 11/16 | 4 1/2 | 3'–3 | 3'–8 1/4 | a | b | d | f | h | k | |
| 94C2 | 1'–8 1/16 | 5/16 | 12 3/8 | 2 3/8 | 3'–11 3/4 | 1 1/2 | 11/16 | 4 1/2 | 3'–3 | 3'–8 1/4 | aa | ab | ad | af | ah | ak | |

| MARK | "AA" | "BB" | "CC" | "DD" |
|---|---|---|---|---|
| 94C1 | *8 1/2 | 3 1/2 | *11 3/4 | 7 1/2 |
| 94C2 | *9 1/2 | 3 3/4 | *11 7/16 | 8 1/2 |

SHOP NOTE:

* NOT TYPICAL DIMENSION

| VENT HOLE SIZES | |
|---|---|
| WEB MEMBER OD | HOLE DIA ± 1/4" |
| < 3.500 | 3/4 |
| 3.500 | 1 3/4 |
| 4.000 | 2 |
| 4.500 | 2 1/4 |
| 5.563 | 2 3/4 |
| 6.625 | 3 1/4 |

C3546–94

| PARTS PER CONT | PART MARK NO | NO OF PIECES REQ'D | SECTION SYM | DESCRIPTION OF MATERIAL | LENGTH FEET | LENGTH INCHES | PARTS FOR ONE UNIT | |
|---|---|---|---|---|---|---|---|---|
| | 94C1 | 1 | | UPRIGHT | | | | |
| | a | 2 | PIPE | 18.000 x .250 | 41 | 1 1/4 | | |
| | b | 1 | PIPE | 4.500 x .188 | 4 | 3 1/2 | | |
| | d | 6 | PIPE | 4.500 x .188 | 6 | 7 7/8 | | |
| | f | 1 | W | 8 x 24 | 4 | 4 3/16 | | |
| | h | 2 | PL | 1 1/4 x 24 DIA. | – | – | | |
| | k | 2 | L | 3 1/2 x 3 1/2 x 1/2 | 0 | 7 3/8 | | |
| | | | | | | | | |
| | 94C2 | 1 | | UPRIGHT | | | | |
| | aa | 2 | PIPE | 20.000 x .250 | 40 | 0 | | |
| | ab | 1 | PIPE | 5.563 x .188 | 4 | 1 11/16 | | |
| | ad | 6 | PIPE | 5.563 x .188 | 6 | 4 1/16 | | |
| | af | 1 | W | 8 x 24 | 4 | 2 1/16 | | |
| | ah | 2 | PL | 1 1/4 x 26 DIA. | – | – | | |
| | ak | 2 | L | 3 1/2 x 2 1/2 x 1/2 | 0 | 7 3/8 | | |
| | v1 | 1 | PIPE | 6.625 x .864 | 0 | 3 | | |
| | z1 | 3 | OP | 1 1/4" FORGED HALF CPLG (3000#) | – | – | | |
| | | | | | | | | |

NOTE:

SEE GENERAL NOTES DRAWING FOR MATERIAL SPECIFICATIONS, FOUNDATION AND STANDARD NOTES

REF DWG: E14

OH–20

AASHTO 6th Edition Spec's

SEALED BY:

SOUTH CAROLINA LICENSED PROFESSIONAL ENGINEER
No. 38665
DAVID A LALLONE

Oct 25 2023

| NO: | REVISIONS | DATE | MADE | CHECKED |
|---|---|---|---|---|
| 0 | CHECK COMPLETE | 10/16/23 | DLK | DLJ |


walpar
A valmont COMPANY
POST OFFICE BOX 28650
BIRMINGHAM ALABAMA 35228
4200 JEFFERSON AVENUE
BIRMINGHAM ALABAMA 35221
PHONE (205)–925–4990
FAX (205) 925–7273


0

BTDPUDET

| | |
|---|---|
| STATE: | South Carolina |
| FED PROJ: | Carolina Crossroads Phase 1 & 2 |
| ST PROJ: | P039718 |
| COUNTY: | Lexington & Richland |
| ROUTE: | I–26 & I–126 |
| SUBJECT: | OVERHEAD SIGN SUPPORT |
| | DETAIL OF UPRIGHT |
| FOR: | Archer–United Joint Venture |
| DRAWN BY: | DLK DATE: 10/4/23 |
| CHECKED BY: | DLJ DATE: 10/16/23 |
| DWG NO: | C3546–94 |

NAME: E:\acad\JobsNProg\3546\3546–94.dwg DATE: OCT 16, 2023 TIME: 4:22 AM dj706290

| MARK | QTY | VIEW | "A" | "B" | "C" | PANELS | "D" | "E" | | "G" | "H" |
|---|---|---|---|---|---|---|---|---|---|---|---|
| 95T1 | 1 | OPHAND | 31'–3⅛ | 31'–2⅞ | 15'–3 | 8 @ 3'–7½(±) = 29'–0 | 3'–9 | 3'–3 | | 9⅛ | 8⅞ |
| 95T2 | 1 | SHOWN | 31'–3⅛ | 31'–2⅞ | 15'–3 | 8 @ 3'–7½(±) = 29'–0 | 3'–9 | 3'–3 | | 9⅛ | 8⅞ |

| MARK | "J" | "K" | "L" | "M" | "N" | "P" | "R" | 1 | 2 | 3 | 4 | 5 | 6 | 7 | 8 | 9 | | 11 | SHIM | SWEEP |
|---|---|---|---|---|---|---|---|---|---|---|---|---|---|---|---|---|---|---|---|---|
| 95T1 | ¼ | 7½ | ¼ | 4 | ⅞ | 1'–6 | 2½ | a | b | n | d | f | h | k | m | s | | z1 | 1/16 | ½ |
| 95T2 | ¼ | 7½ | ¼ | 4 | ⅞ | 1'–6 | 2½ | a | b | n | d | f | h | k | m | s | | z1 | 1/16 | ½ |

WIRE OUTLET LOCATION CHART

| MARK | "S" | "T" | "W" |
|---|---|---|---|
| 95T1 | 26'–10½ | ------ | ------ |
| 95T2 | 1'–6 | 23'–3 | ------ |

C3546–95

| PARTS PER CONT | PART MARK NO | NO. OF PIECES REQ'D | SECTION SYM | DESCRIPTION OF MATERIAL | LENGTH FEET | LENGTH INCHES | PARTS FOR ONE UNIT | |
|---|---|---|---|---|---|---|---|---|
| | 95T1 | 1 | | BOX TRUSS | | | | |
| | a | 2 | PIPE | 4.500 x .188 | 31 | 2¾ | | |
| | b | 2 | PIPE | 4.500 x .188 | 31 | 2½ | | |
| | d | 4 | PIPE | 1.315 x .133 | 3 | 4⅝ | | |
| | k | 4 | PIPE | 1.315 x .133 | 2 | 10⅝ | | |
| | f | 16 | PIPE | 1.660 x .140 | 4 | 8⅜ | | |
| | h | 16 | PIPE | 1.660 x .140 | 4 | 4 3/16 | | |
| | n | 4 | PIPE | 1.660 x .140 | 4 | 7¼ | | |
| | m | 4 | PL | ¾ x 10½ DIA. | – | – | | |
| | s | 4 | PL | ¼ x 2½ | 0 | 4¼ | | |
| | z1 | 1 | OP | 1¼" FORGED HALF CPLG (3000#) | – | – | | |
| | | | | | | | | |
| | 95T2 | 1 | | BOX TRUSS | | | | |
| | a | 2 | PIPE | 4.500 x .188 | 31 | 2¾ | | |
| | b | 2 | PIPE | 4.500 x .188 | 31 | 2½ | | |
| | d | 4 | PIPE | 1.315 x .133 | 3 | 4⅝ | | |
| | k | 4 | PIPE | 1.315 x .133 | 2 | 10⅝ | | |
| | f | 16 | PIPE | 1.660 x .140 | 4 | 8⅜ | | |
| | h | 16 | PIPE | 1.660 x .140 | 4 | 4 3/16 | | |
| | n | 4 | PIPE | 1.660 x .140 | 4 | 7¼ | | |
| | m | 4 | PL | ¾ x 10½ DIA. | – | – | | |
| | s | 4 | PL | ¼ x 2½ | 0 | 4¼ | | |
| | z1 | 2 | OP | 1¼" FORGED HALF CPLG (3000#) | – | – | | |

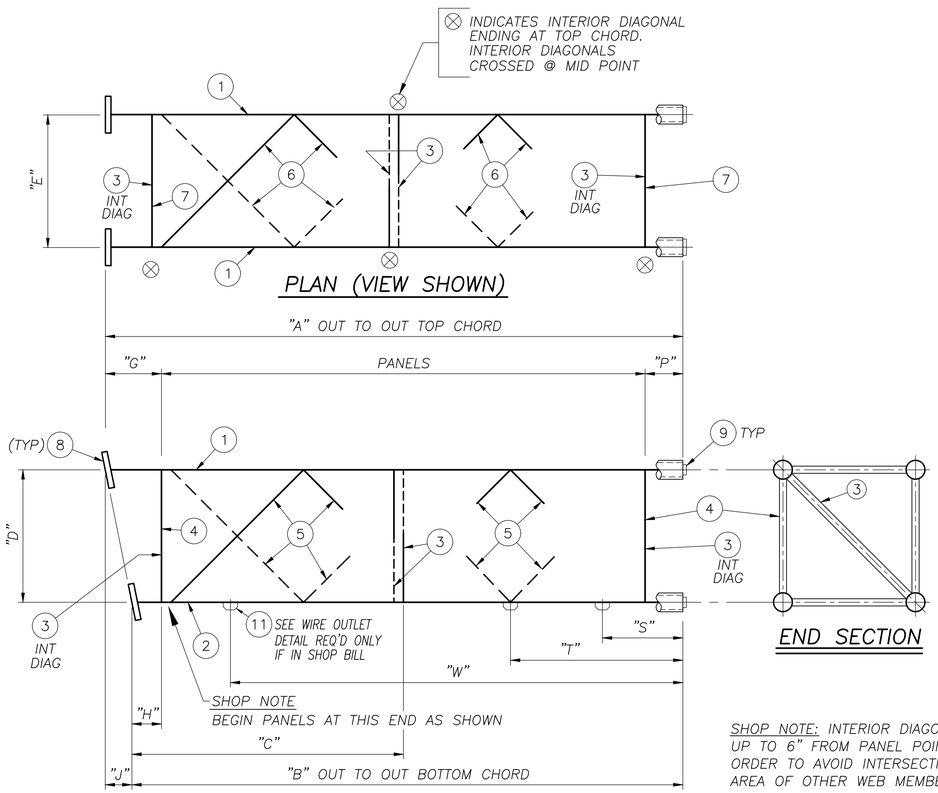


SHOP NOTE: INTERIOR DIAGONALS MAY BE OFFSET UP TO 6" FROM PANEL POINTS ON TRUSS IN ORDER TO AVOID INTERSECTING WELDS IN THE AREA OF OTHER WEB MEMBERS.

DO NOT OFFSET MEMBERS SO AS TO INTERFERE WITH BOLTED CONNECTIONS AT FIELD SPLICES.

| VENT HOLE SIZES | |
|---|---|
| WEB MEMBER (O.D.) | HOLE DIA. ± ¼" |
| < 3.500 | ¾ |
| 3.500 | 1¾ |
| 4.000 | 2 |
| 4.500 | 2¼ |
| 5.563 | 2¾ |
| 6.625 | 3¼ |

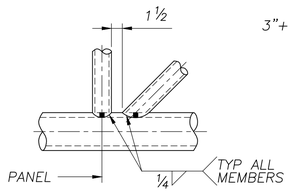


JOINT DETAIL

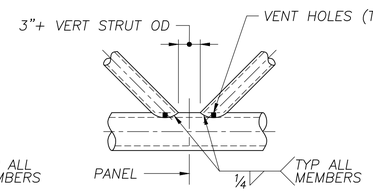


JOINT DETAIL

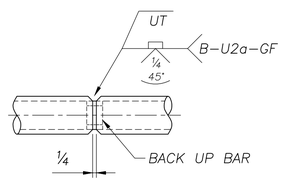


OPTIONAL CHORD SPLICE

(FOR WALL THK 5/16" OR GREATER ONLY)

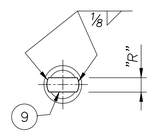


END CAP DETAIL

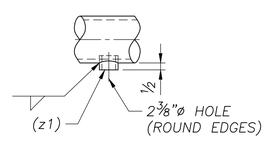


WIRE OUTLET DETAIL

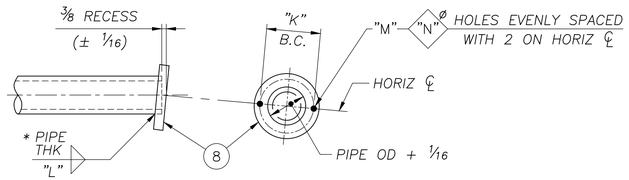


FLANGE DETAIL

* NOTE: PIPE THK –1/16" FOR PIPE WALLS > ¼"

NOTE:

SEE GENERAL NOTES DRAWING FOR MATERIAL SPECIFICATIONS, FOUNDATION AND STANDARD NOTES

REF DWG: E14

OH–20

AASHTO 6th Edition Spec's

SEALED BY:




Oct 25 2023


walpar
A valmont COMPANY
POST OFFICE BOX 28650
BIRMINGHAM ALABAMA 35228
4200 JEFFERSON AVENUE
BIRMINGHAM ALABAMA 35221
PHONE (205)–925–4990
FAX (205) 925–7273


0

| | |
|---|---|
| STATE: | South Carolina |
| FED PROJ: | Carolina Crossroads Phase 1 & 2 |
| ST PROJ: | P039718 |
| COUNTY: | Lexington & Richland |
| ROUTE: | I–26 & I–126 |

SUBJECT: OVERHEAD SIGN SUPPORT
DETAIL OF TRUSS

FOR: Archer–United Joint Venture

DRAWN BY: DLK DATE: 10/4/23

CHECKED BY: DLJ DATE: 10/16/23

DWG NO: C3546–95

| NO: | REVISIONS | DATE | MADE | CHECKED |
|---|---|---|---|---|
| 0 | CHECK COMPLETE | 10/16/23 | DLK | DLJ |

BTESDET


NAME: E:\acad\JobsNPrg\3546\3546–95.dwg DATE: OCT 16, 2023 TIME: 4:22 AM dj706290

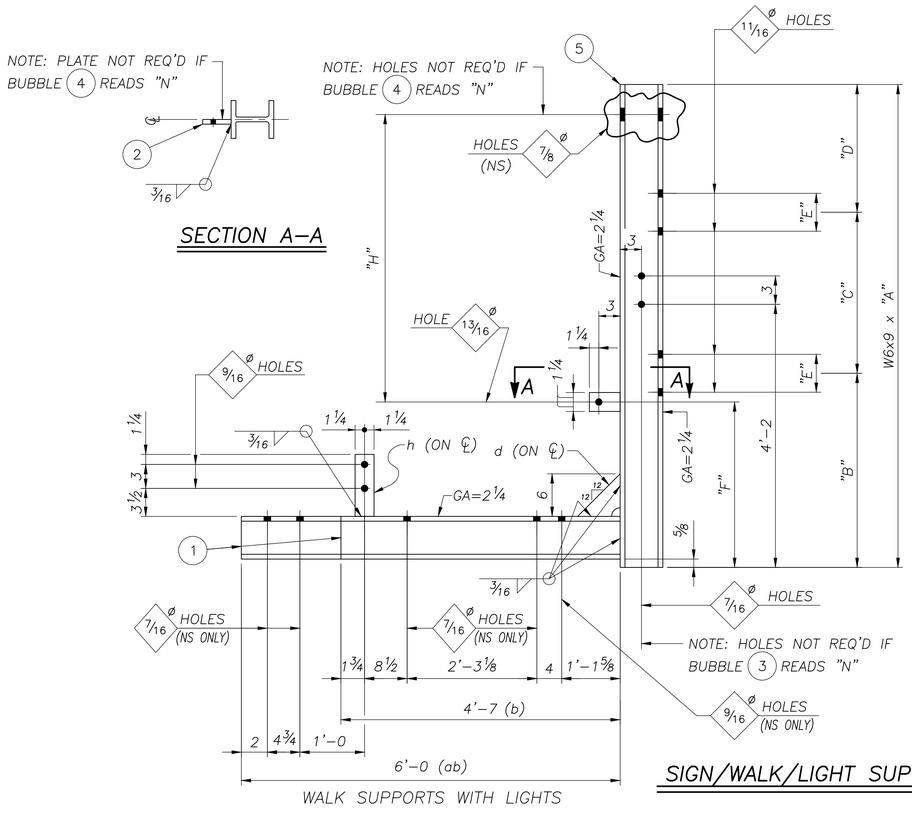


WALK SUPPORTS WITH LIGHTS

## SIGN/WALK/LIGHT SUPPORTS

| MARK | QTY | "A" | "B" | "C" | "D" | "E" | "F" | "H" | 1 | 2 | 3 | 4 | 5 |
|---|---|---|---|---|---|---|---|---|---|---|---|---|---|
| 96S1 | 1 | 9'–0½ | 4'–9½ | 3'–9 | 6 | 5⅛ | ---- | ---- | b | – | Y | N | a |
| 96S2 | 4 | 9'–0½ | 4'–9½ | 3'–9 | 6 | 5⅛ | 2'–3¼ | 5'–9½ | ab | f | N | Y | aa |
| 96S3 | 1 | 9'–0½ | 4'–9½ | 3'–9 | 6 | 5⅛ | 2'–3¼ | 5'–9½ | ab | f | Y | Y | ba |

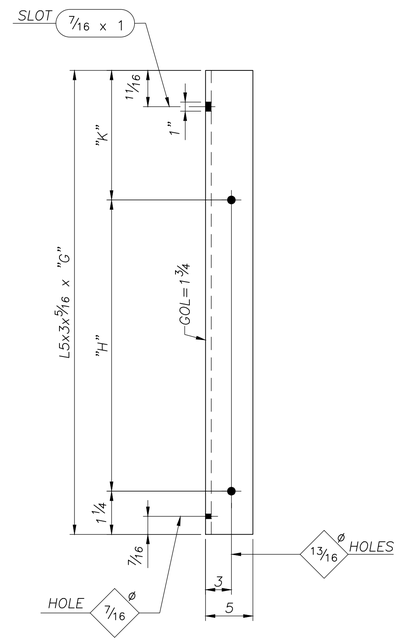


## SIGN HANGERS

| MARK | QTY | "G" | "H" | "K" |
|---|---|---|---|---|
| 96H1 | 5 | 9'–0¼ | 5'–9½ | 3'–1½ |

| PARTS PER CONT | PART MARK NO | NO OF PIECES REQ'D | SECTION SYM | DESCRIPTION OF MATERIAL | LENGTH FEET | LENGTH INCHES | PARTS FOR ONE UNIT |
|---|---|---|---|---|---|---|---|
| | 96S1 | 1 | | WALK & SIGN SUPPORTS | | | |
| | a | 1 | W | 6 x 9 | 9 | 0½ | |
| | b | 1 | W | 6 x 9 | 4 | 7 | |
| | d | 1 | PL | 1/4 x 6 | 0 | 6 | |
| | h | 1 | PL | 1/2 x 2 1/2 | 0 | 7¾ | |
| | 96S2 | 4 | | WALK & SIGN SUPPORTS | | | |
| | aa | 4 | W | 6 x 9 | 9 | 0½ | |
| | ab | 4 | W | 6 x 9 | 6 | 0 | |
| | d | 4 | PL | 1/4 x 6 | 0 | 6 | |
| | f | 4 | PL | 3/8 x 2 1/2 | 0 | 4¼ | |
| | h | 4 | PL | 1/2 x 2 1/2 | 0 | 7¾ | |
| | 96S3 | 1 | | WALK & SIGN SUPPORTS | | | |
| | ba | 1 | W | 6 x 9 | 9 | 0½ | |
| | ab | 1 | W | 6 x 9 | 6 | 0 | |
| | d | 1 | PL | 1/4 x 6 | 0 | 6 | |
| | f | 1 | PL | 3/8 x 2 1/2 | 0 | 4¼ | |
| | h | 1 | PL | 1/2 x 2 1/2 | 0 | 7¾ | |
| | | | | | | | |
| | 96H1 | 5 | | SIGN HANGERS | | | |
| | k | 5 | L | 5 x 3 x 5/16 | 9 | 0¼ | |

C3546–96

**NOTE:**
SEE GENERAL NOTES DRAWING FOR MATERIAL SPECIFICATIONS, FOUNDATION AND STANDARD NOTES

REF DWG: E14

OH–20

AASHTO 6th Edition Spec's

SEALED BY:

SOUTH CAROLINA PROFESSIONAL ENGINEER
No. 38665
DAVID A LALLONE

Oct 25 2023

| NO: | REVISIONS | DATE | MADE | CHECKED |
|---|---|---|---|---|
| 0 | CHECK COMPLETE | 10/16/23 | DLK | DLJ |


walpar
A valmont COMPANY
POST OFFICE BOX 28650
BIRMINGHAM ALABAMA 35228
4200 JEFFERSON AVENUE
BIRMINGHAM ALABAMA 35221
PHONE (205)–925–4990
FAX (205) 925–7273


STATE: South Carolina
FED PROJ: Carolina Crossroads Phase 1 & 2
ST PROJ: P039718
COUNTY: Lexington & Richland
ROUTE: I–26 & I–126

SUBJECT: SIGN SUPPORT
WALK SUPPORT & SIGN HANGER DETAILS

FOR: Archer–United Joint Venture

DRAWN BY: DLK DATE: 10/4/23
CHECKED BY: DLJ DATE: 10/16/23

DWG NO: C3546–96

SH–DET4

NAME: E:\acad\JobsNProg\3546\3546–96.dwg DATE: OCT 16, 2023 TIME: 4:22 AM dj706290

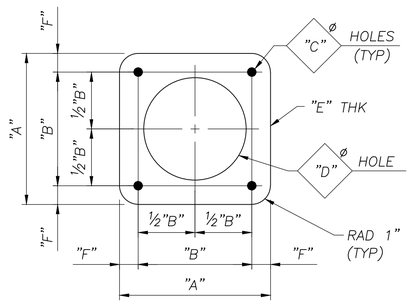


TYPE "AA"
(SEE CHART FOR INFORMATION)

## ANCHOR TEMPLATE CHART (ALL DIMENSIONS IN INCHES)

| MARK | QTY | TYPE | "A" | "B" | "C" | "D" | "E" | "F" |
|---|---|---|---|---|---|---|---|---|
| 97P1 | 8 | AA | 14½ | 10½ | 1⅜ | 10½ | ¼ | 2 |

**NOTE:**
THREADS (ROLLED OR CUT) FOR "H" NUT

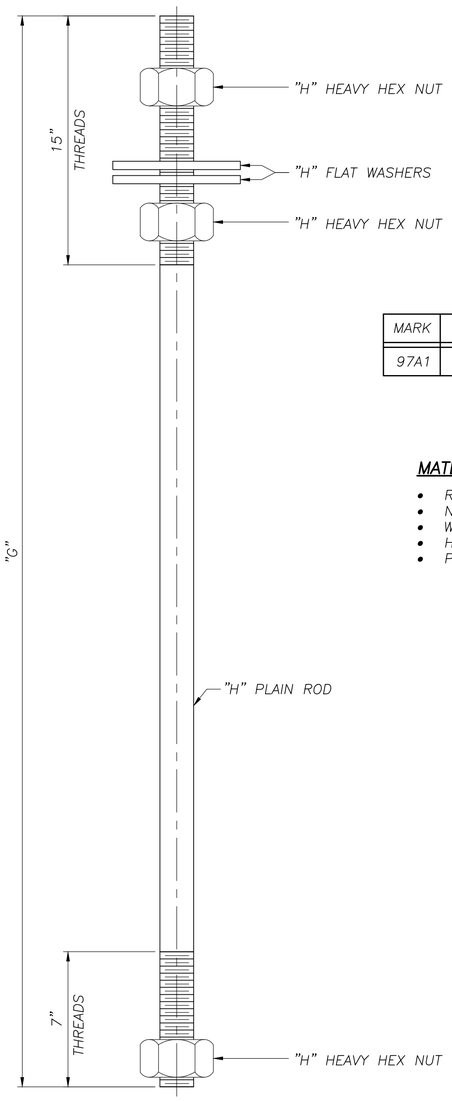


## ~ ANCHOR BOLTS ~

| MARK | "G" | "H"ø | (TPI) | ROD QTY | NUT QTY | FW QTY | |
|---|---|---|---|---|---|---|---|
| 97A1 | 4'–6 | 1¼ | 7 | 16 | 48 | 32 | |

**MATERIAL SPECS:**

- RODS – ASTM F1554, GRADE 55, S1
- NUTS – ASTM A563,GR.DH OR ASTM A194,GR.2H
- WASHERS – ASTM F436
- HARDWARE – GALV PER ASTM–A153
- PLAIN ROD – GALV FULL LENGTH PER ASTM–A153

| PARTS PER CONT | PART MARK NO | NO OF PIECES REQ'D | SECTION SYM | DESCRIPTION OF MATERIAL | LENGTH FEET | LENGTH INCHES | PARTS FOR ONE UNIT | |
|---|---|---|---|---|---|---|---|---|
| | 97P1 | 8 | | ANCHOR TEMPLATES | | | | |
| | a | 8 | PL | ¼ x 14½ | 1 | 2½ | | |

C3546–97

| SHIPPING LIST | | |
|---|---|---|
| QTY | MARK | DESCRIPTION |
| 8 | 97P1 | ANCHOR TEMPLATES |
| 16 | 97A1 | ANCHOR BOLTS |
| | | |

NOTE: SHOP SHIP FROM THIS DRAWING

**NOTE:**
DO NOT GALVANIZE TEMPLATES

**NOTE:**
SEE GENERAL NOTES DRAWING FOR MATERIAL SPECIFICATIONS, FOUNDATION AND STANDARD NOTES

REF DWG: E15

OH–22

AASHTO 6th Edition Spec's

SEALED BY:




Oct 25 2023

| NO: | REVISIONS | DATE | MADE | CHECKED |
|---|---|---|---|---|
| 0 | CHECK COMPLETE | 10/16/23 | DLK | DLJ |

walpar
A valmont COMPANY
POST OFFICE BOX 28650
BIRMINGHAM ALABAMA 35228
4200 JEFFERSON AVENUE
BIRMINGHAM ALABAMA 35221
PHONE (205)–925–4990
FAX (205) 925–7273

0

| | |
|---|---|
| STATE: | South Carolina |
| FED PROJ: | Carolina Crossroads Phase 1 & 2 |
| ST PROJ: | P039718 |
| COUNTY: | Lexington & Richland |
| ROUTE: | I–26 & I–126 |
| SUBJECT: | SIGN STRUCTURE<br>ANCHOR TEMPLATE & SOLE PLATE DETAILS |
| FOR: | Archer–United Joint Venture |
| DRAWN BY: | DLK DATE: 10/4/23 |
| CHECKED BY: | DLJ DATE: 10/16/23 |
| DWG NO: | C3546–97 |

ABAT_TEMP

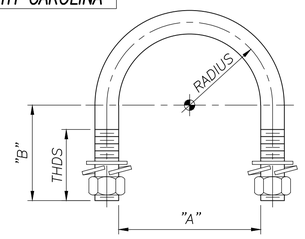


**NOTE 1:**
- UBOLT MATERIAL PROPERTIES TO MEET OR EXCEED A307
- GALV PER A153

**NOTE 2:**
- UBOLT MATERIAL PROPERTIES TO MEET OR EXCEED A307
- ZINC PL PER B633

## ~ U-BOLTS w/(2ea) HN/LW/FW ~

NUTS: ASTM A563,GR.DH OR ASTM A194,GR.2H
WASHERS: ASTM F436 & ANSI-B18.21.1

| MARK | QTY | DIA | "A" | "B" | RADIUS | THDS | MATERIAL |
|---|---|---|---|---|---|---|---|
| U1 | 16 | 5/16 | 1 11/16 | 1 5/8 | 1 | 1 1/4 | NOTE 2 |
| U4 | 40 | 1/2 | 4 5/8 | 4 1/4 | 2 9/16 | 2 | NOTE 1 |

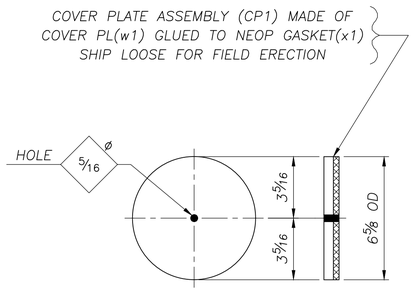


## 1 ~ COVER PLATE ASSEMBLY ~ CP1

| PART MARK NO | NO OF PIECES REQ'D | SECTION SYM | DESCRIPTION OF MATERIAL | LENGTH FEET | LENGTH INCHES | PARTS FOR ONE UNIT |
|---|---|---|---|---|---|---|
| CP1 | 1 | | COVER PLATE ASSEMBLY | | | |
| w1 | 1 | PL | 1/4 x 6 5/8 DIA. (GALV A123) | – | – | 1 |
| x1 | 1 | OP | 1/8 x 6 5/8 DIA. (NEOP GASKET) | – | – | 1 |

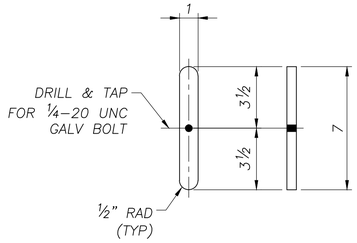


## 1 ~ HANDHOLE BAR ~ HB1

| PART MARK NO | NO OF PIECES REQ'D | SECTION SYM | DESCRIPTION OF MATERIAL | LENGTH FEET | LENGTH INCHES | PARTS FOR ONE UNIT |
|---|---|---|---|---|---|---|
| HB1 | 1 | | HANDHOLE BAR | | | |
| w2 | 1 | PL | 1/4 x 1 (GALV A123) | 0 | 7 | 1 |

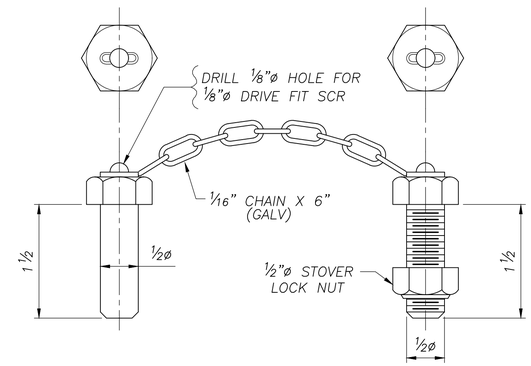


## 8 ~ HINGE PIN ASSEMBLY ~ 98P1

MAT'L SPECS: ASTM A307 (ZINC PL UN)

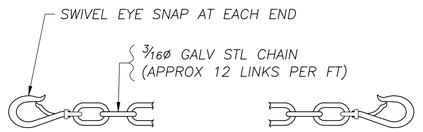


## ~ SAFETY CHAIN ~

| MARK | QTY | LENGTH |
|---|---|---|
| 98S1 | 2 | 4'-6 |

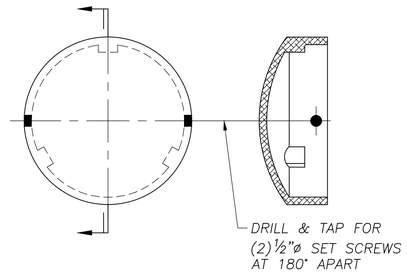


## ~ POLE CAPS ~

(ALUM 356-F) (ASTM B26, A356)

| MARK | QTY | PART No | REMARKS |
|---|---|---|---|
| C8 | 4 | 388 | 8 5/8ø PIPE |

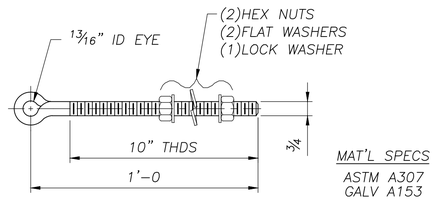


## 4 ~ EYE BOLT ASSEMBLY ~ 98M1

NUTS: ASTM A563,GR.DH OR ASTM A194,GR.2H
WASHERS: ASTM F436 & ANSI-B18.21.1

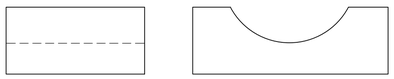

## ~ SADDLE SHIM DETAIL ~

(ALUM 356-T6)

| MARK | QTY | PART No | REMARKS |
|---|---|---|---|
| S4 | 4 | 350 | FOR 4 1/2 |

**NOTE:**
SEE GENERAL NOTES DRAWING FOR MATERIAL SPECIFICATIONS, FOUNDATION AND STANDARD NOTES

REF DWGS: E15

OH-22

AASHTO 6th Edition Spec's

SEALED BY:

SOUTH CAROLINA PROFESSIONAL ENGINEER
No. 38665
DAVID A LALLIONE

Oct 25 2023

walpar
A valmont COMPANY
POST OFFICE BOX 28650
BIRMINGHAM ALABAMA 35228
4200 JEFFERSON AVENUE
BIRMINGHAM ALABAMA 35221
PHONE (205)-925-4990
FAX (205) 925-7273

| NO: | REVISIONS | DATE | MADE | CHECKED |
|---|---|---|---|---|
| 0 | CHECK COMPLETE | 10/16/23 | DLK | DLJ |

STATE: South Carolina
FED PROJ: Carolina Crossroads Phase 1 & 2
ST PROJ: P039718
COUNTY: Lexington & Richland
ROUTE: I-26 & I-126

SUBJECT: SIGN STRUCTURES
MISC DETAILS
FOR: Archer-United Joint Venture

DRAWN BY: DLK DATE: 10/4/23
CHECKED BY: DLJ DATE: 10/16/23

DWG NO: C3546-98

KITDWG3

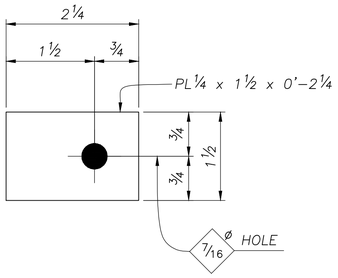


## 16 ~ CLAMP PLATES ~ 99M1

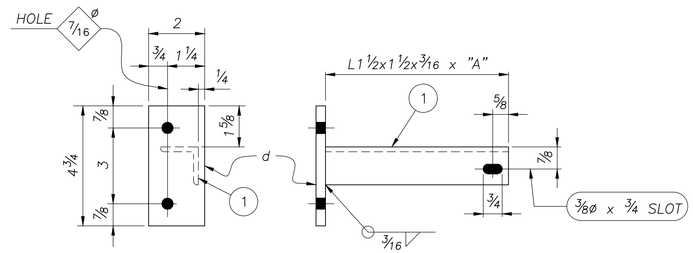


## ~ SAFETY CHAIN SUPPORT ~

(SEE CHART)

| MARK | QTY | "A" | (1) |
|---|---|---|---|
| 99M3 | 2 | 2'-3 | f |

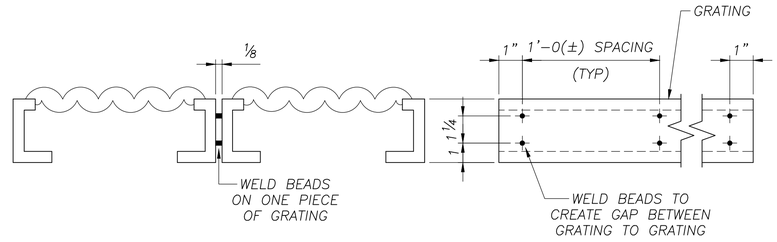


## GRATING GAP DETAIL

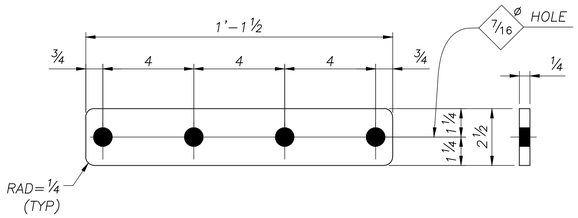


## 2 ~ SPLICE PLATES ~ 99M2

(FOR GRATING)

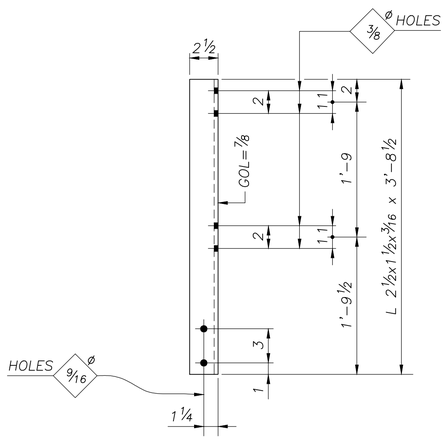


## 8 ~ HANDRAIL POSTS ~ 99P1

(ALUMINUM)

### SHOP NOTE:

GRATING TO BE "GRIP STRUT", OR EQUAL SAFETY GRATING 3" DEEP, FORMED FROM 12 GA SHEETS GALV AFTER FAB WELDED TOGETHER IN A COMBINATION OF THESE SIZES
(1) #8 DIAMOND 18 3/4" WIDE – CAT# 83012 AND
(1) #5 DIAMOND 11 3/4" WIDE – CAT# 53012

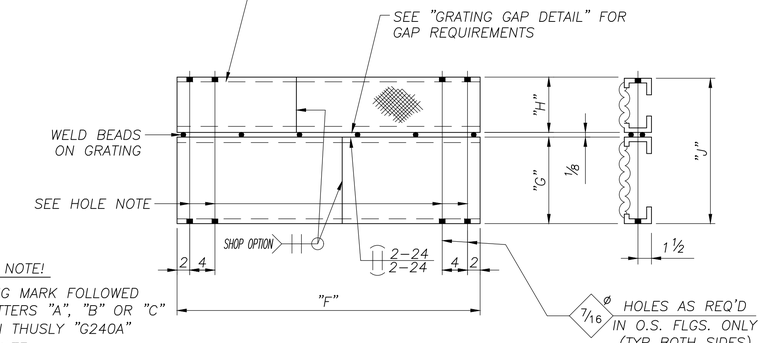


HOLE NOTE!

GRATING MARK FOLLOWED BY LETTERS "A", "B" OR "C" SHOWN THUSLY "G240A" DESIGNATE:
"A" – NO HOLES
"B" – HOLES 1–END
"C" – HOLES BOTH ENDS

## ~ GRATING ~

(SEE CHART)

| MARK | QTY | "F" | "G" | "H" | "J" |
|---|---|---|---|---|---|
| 99G1B | 2 | 18'-0 | 1'-6 3/4 | 11 3/4 | 2'-6 5/8 |

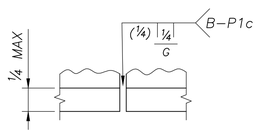


## TOE ANGLE SPLICE

( OPTIONAL )

| PARTS PER CONT | PART MARK NO | NO OF PIECES REQ'D | SECTION SYM | DESCRIPTION OF MATERIAL | LENGTH FEET | LENGTH INCHES | PARTS FOR ONE UNIT | |
|---|---|---|---|---|---|---|---|---|
| | 99M1 | 16 | | CLAMP PLATES | | | | |
| | a | 16 | PL | 1/4 x 1 1/2 | 0 | 2 1/4 | | |
| | 99M2 | 2 | | SPLICE PLATES | | | | |
| | b | 2 | PL | 1/4 x 2 1/2 | 1 | 1 1/2 | | |
| | 99M3 | 2 | | SAFETY CHAIN SUPPORT | | | | |
| | d | 2 | PL | 1/4 x 2 | 0 | 4 3/4 | | |
| | f | 2 | L | 1 1/2 x 1 1/2 x 3/16 | 2 | 3 | | |
| | 99G1B | 2 | | GRATING | | | | |
| | g | 2 | GRT | 18 3/4 WIDE | 18 | 0 | | |
| | n | 2 | GRT | 11 3/4 WIDE | 18 | 0 | | |
| | 99P1 | 8 | | HANDRAIL POSTS | | | | |
| | h | 8 | ALL | 2 1/2 x 1 1/2 x 3/16 (ALUM 6061) | 3 | 8 1/2 | | |
| | 99R1 | 8 | | HANDRAIL | | | | |
| | k | 8 | ALPI | 1.660 x .140 (ALUM 6061) | 9 | 0 | | |
| | 99A1 | 1 | | SAFETY ANGLE | | | | |
| | m | 1 | L | 4 x 3 x 1/4 | 36 | 0 | | |
| | 99L1 | 2 | | LIGHTING SUPPORTS (ALUM 6063-T6) | | | | |
| | p | 2 | ALUN | UNISTRUT 1 5/8 x 1 5/8 x .105 | 14 | 0 | | |
| | 99L2 | 2 | | LIGHTING SUPPORTS (ALUM 6063-T6) | | | | |
| | ap | 2 | ALUN | UNISTRUT 1 5/8 x 1 5/8 x .105 | 11 | 6 | | |

C3546-99

### NOTE:

SEE GENERAL NOTES DRAWING FOR MATERIAL SPECIFICATIONS, FOUNDATION AND STANDARD NOTES

REF DWG: E15

OH-22

AASHTO 6th Edition Spec's

SEALED BY:

SOUTH CAROLINA PROFESSIONAL ENGINEER
No. 38665
DAVID A LALLONE

Oct 25 2023

| NO: | REVISIONS | DATE | MADE | CHECKED |
|---|---|---|---|---|
| 0 | CHECK COMPLETE | 10/16/23 | DLK | DLJ |


walpar
A valmont COMPANY
POST OFFICE BOX 28650
BIRMINGHAM ALABAMA 35228
4200 JEFFERSON AVENUE
BIRMINGHAM ALABAMA 35221
PHONE (205)-925-4990
FAX (205) 925-7273


STATE: South Carolina
FED PROJ: Carolina Crossroads Phase 1 & 2
ST PROJ: P039718
COUNTY: Lexington & Richland
ROUTE: I-26 & I-126

SUBJECT: SIGN STRUCTURE
MISC DETAILS
FOR: Archer-United Joint Venture

DRAWN BY: DLK DATE: 10/4/23
CHECKED BY: DLJ DATE: 10/16/23
DWG NO: C3546-99

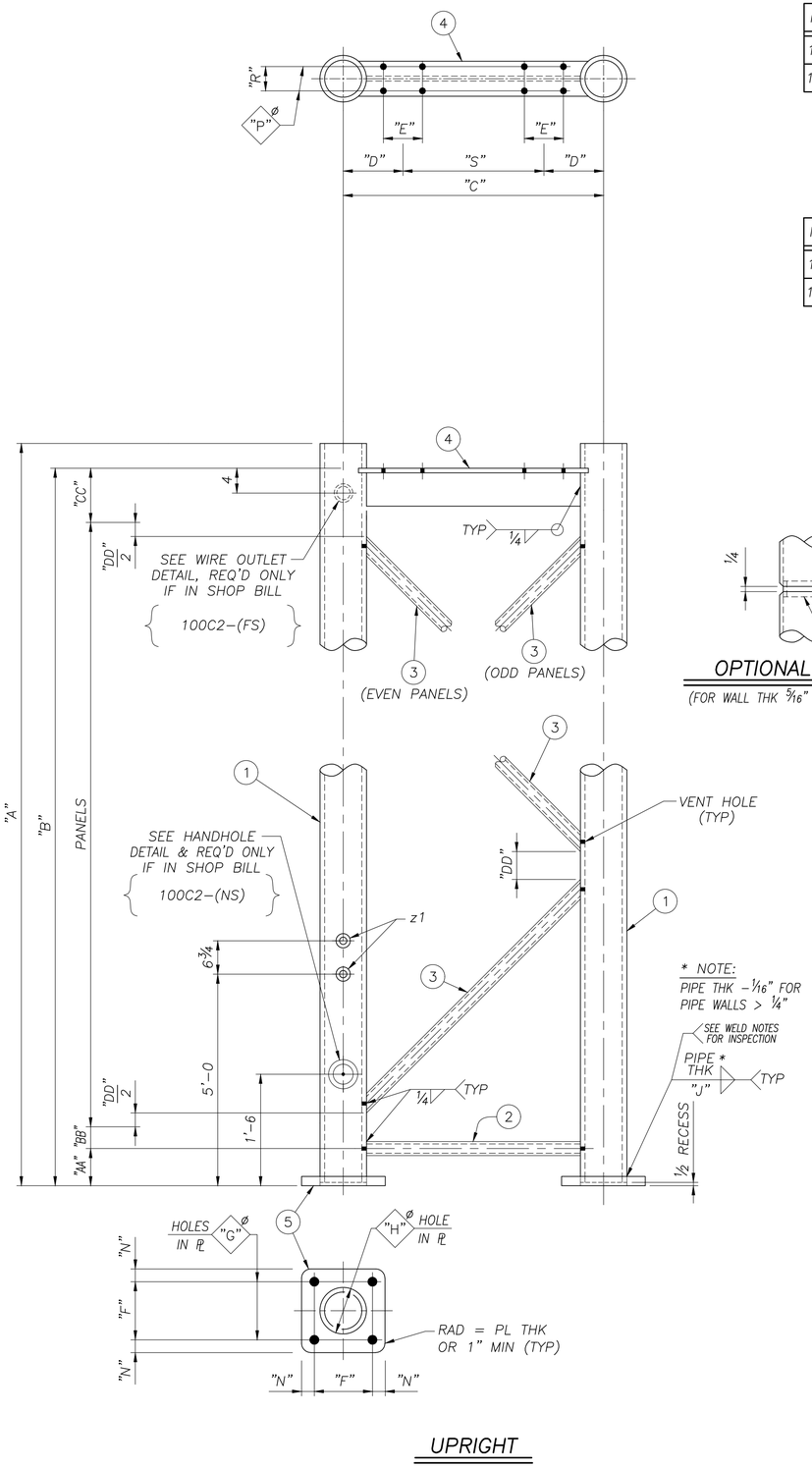


## UPRIGHT

| MARK | QTY | "A" | "B" | "C" | PANELS | "D" | "E" | "F" | "G" |
|---|---|---|---|---|---|---|---|---|---|
| 100C1 | 1 | 25'–7 1/4 | 25'–3 1/4 | 4'–9 | 5 @ 4'–9(±) = 23'–9 | 9 | 5 1/8 | 10 1/2 | 1 1/2 |
| 100C2 | 1 | 23'–11 1/4 | 23'–7 1/4 | 4'–9 | 5 @ 4'–5(±) = 22'–1 | 9 | 5 1/8 | 10 1/2 | 1 1/2 |

| MARK | "H" | "J" | | | | "N" | "P" | "R" | "S" | | 1 | 2 | 3 | 4 | 5 | | |
|---|---|---|---|---|---|---|---|---|---|---|---|---|---|---|---|---|---|
| 100C1 | 8 1/16 | 5/16 | | | | 2 1/2 | 1 1/16 | 4 1/2 | 3'–3 | | a | b | d | f | h | | |
| 100C2 | 8 1/16 | 5/16 | | | | 2 1/2 | 1 1/16 | 4 1/2 | 3'–3 | | aa | b | ad | f | h | | |

| MARK | "AA" | "BB" | "CC" | "DD" |
|---|---|---|---|---|
| 100C1 | 6 | 3 1/2 | 8 3/4 | 5 3/8 |
| 100C2 | 6 | 3 1/2 | 8 3/4 | 5 3/8 |

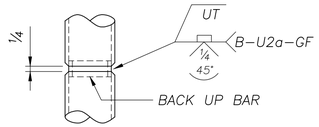


## OPTIONAL SPLICE

(FOR WALL THK 5/16" OR GREATER ONLY)

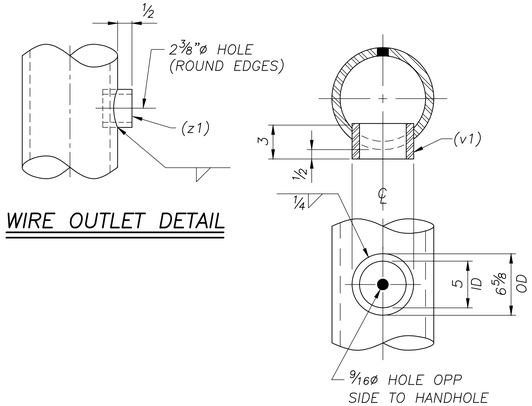


## WIRE OUTLET DETAIL

## HANDHOLE DETAIL

| VENT HOLE SIZES | |
|---|---|
| WEB MEMBER OD | HOLE DIA ± 1/4" |
| < 3.500 | 3/4 |
| 3.500 | 1 3/4 |
| 4.000 | 2 |
| 4.500 | 2 1/4 |
| 5.563 | 2 3/4 |
| 6.625 | 3 1/4 |

| | PARTS PER CONT | PART MARK NO | NO OF PIECES REQ'D | SECTION SYM | DESCRIPTION OF MATERIAL | LENGTH FEET | LENGTH INCHES | PARTS FOR ONE UNIT | |
|---|---|---|---|---|---|---|---|---|---|
| | | 100C1 | 1 | | UPRIGHT | | | | |
| | | a | 2 | PIPE | 8.625 x .188 | 25 | 6 3/4 | | |
| | | b | 1 | PIPE | 2.375 x .154 | 4 | 0 5/8 | | |
| | | d | 5 | PIPE | 2.375 x .154 | 5 | 10 3/4 | | |
| | | f | 1 | WT | 6 x 13 | 4 | 3 5/16 | | |
| | | h | 2 | PL | 1 1/4 x 15 1/2 | 1 | 3 1/2 | | |
| | | | | | | | | | |
| | | 100C2 | 1 | | UPRIGHT | | | | |
| | | aa | 2 | PIPE | 8.625 x .188 | 23 | 10 3/4 | | |
| | | b | 1 | PIPE | 2.375 x .154 | 4 | 0 5/8 | | |
| | | ad | 5 | PIPE | 2.375 x .154 | 5 | 7 7/8 | | |
| | | f | 1 | WT | 6 x 13 | 4 | 3 5/16 | | |
| | | h | 2 | PL | 1 1/4 x 15 1/2 | 1 | 3 1/2 | | |
| | | v1 | 1 | PIPE | 6.625 x .864 | 0 | 3 | | |
| | | z1 | 3 | OP | 1 1/4" FORGED HALF CPLG (3000#) | – | – | | |
| | | | | | | | | | |

C3546–100

**NOTE:**
SEE GENERAL NOTES DRAWING FOR MATERIAL SPECIFICATIONS, FOUNDATION AND STANDARD NOTES

REF DWG: E15

OH–22

AASHTO 6th Edition Spec's

SEALED BY:

SOUTH CAROLINA PROFESSIONAL ENGINEER
No. 38665
DAVID A LALLONE

Oct 25 2023

| NO: | REVISIONS | DATE | MADE | CHECKED |
|---|---|---|---|---|
| 0 | CHECK COMPLETE | 10/16/23 | DLK | DLJ |


walpar
A valmont COMPANY
POST OFFICE BOX 28650
BIRMINGHAM ALABAMA 35228
4200 JEFFERSON AVENUE
BIRMINGHAM ALABAMA 35221
PHONE (205)–925–4990
FAX (205) 925–7273


0

| | |
|---|---|
| STATE: | South Carolina |
| FED PROJ: | Carolina Crossroads Phase 1 & 2 |
| ST PROJ: | P039718 |
| COUNTY: | Lexington & Richland |
| ROUTE: | I–26 & I–126 |
| SUBJECT: | OVERHEAD SIGN SUPPORT<br>DETAIL OF UPRIGHT |
| FOR: | Archer–United Joint Venture |
| DRAWN BY: | DLK DATE: 10/4/23 |
| CHECKED BY: | DLJ DATE: 10/16/23 |
| DWG NO: | C3546–100 |

BTDPUDET

NAME: E:\acad\JobsNPrg\3546\3546–100.dwg DATE: OCT 16, 2023 TIME: 4:20 AM dj706290

| MARK | QTY | VIEW | "A" | "B" | "C" | PANELS | "D" | "E" | | "G" | "H" |
|---|---|---|---|---|---|---|---|---|---|---|---|
| 101T1 | 1 | OPHAND | 35'–6 1/8 | 35'–5 7/8 | 15'–9 | 9 @ 3'–9(±) = 33'–9 | 3'–9 | 3'–3 | | 9 1/8 | 8 7/8 |
| 101T2 | 1 | SHOWN | 35'–6 1/8 | 35'–5 7/8 | 15'–9 | 9 @ 3'–9(±) = 33'–9 | 3'–9 | 3'–3 | | 9 1/8 | 8 7/8 |

| MARK | "J" | "K" | "L" | "M" | "N" | "P" | "R" | 1 | 2 | 3 | 4 | 5 | 6 | 7 | 8 | 9 | 10 | 11 | SHIM | SWEEP |
|---|---|---|---|---|---|---|---|---|---|---|---|---|---|---|---|---|---|---|---|---|
| 101T1 | 1/4 | 7 1/2 | 1/4 | 4 | 7/8 | 1'–0 | 2 1/2 | a | b | n | d | f | h | k | m | s | n | z1 | 1/16 | 9/16 |
| 101T2 | 1/4 | 7 1/2 | 1/4 | 4 | 7/8 | 1'–0 | 2 1/2 | a | b | n | d | f | h | k | m | s | n | z1 | 1/16 | 9/16 |

WIRE OUTLET LOCATION CHART

| MARK | "S" | "T" | "W" |
|---|---|---|---|
| 101T1 | 27'–3 | ------ | ------ |
| 101T2 | 1'–0 | 27'–3 | ------ |

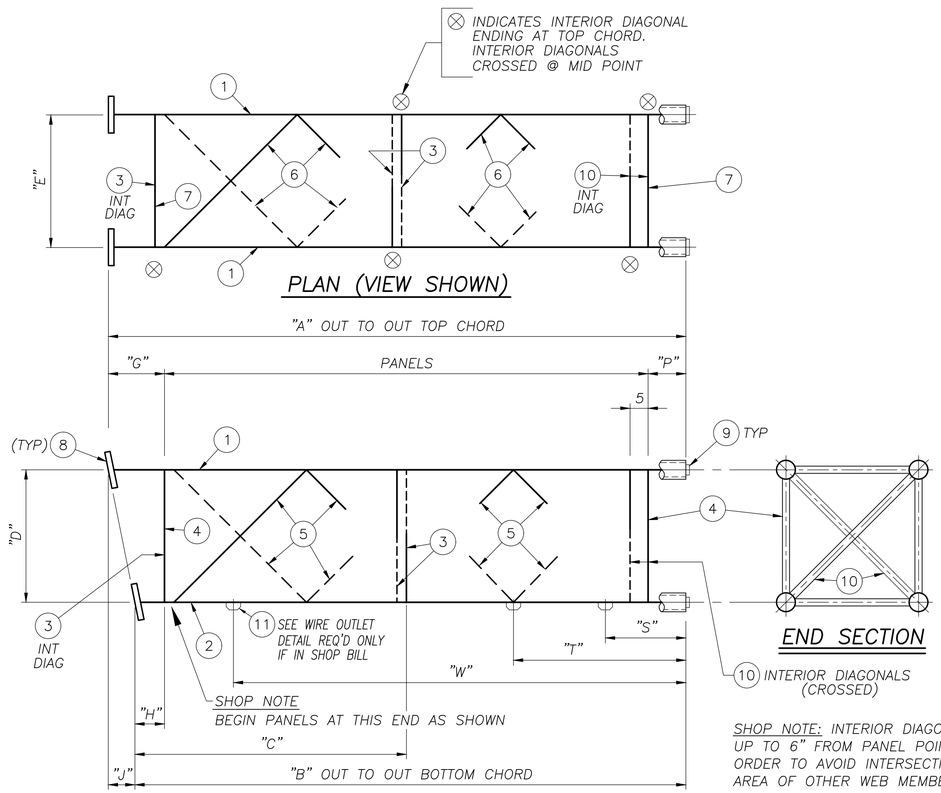


SHOP NOTE: INTERIOR DIAGONALS MAY BE OFFSET UP TO 6" FROM PANEL POINTS ON TRUSS IN ORDER TO AVOID INTERSECTING WELDS IN THE AREA OF OTHER WEB MEMBERS.

DO NOT OFFSET MEMBERS SO AS TO INTERFERE WITH BOLTED CONNECTIONS AT FIELD SPLICES.

| VENT HOLE SIZES | |
|---|---|
| WEB MEMBER (O.D.) | HOLE DIA. ± 1/4" |
| < 3.500 | 3/4 |
| 3.500 | 1 3/4 |
| 4.000 | 2 |
| 4.500 | 2 1/4 |
| 5.563 | 2 3/4 |
| 6.625 | 3 1/4 |

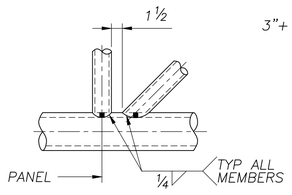


JOINT DETAIL

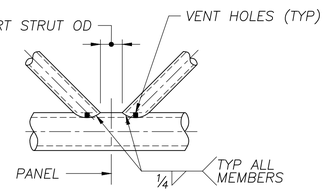


JOINT DETAIL

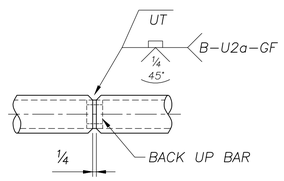


OPTIONAL CHORD SPLICE

(FOR WALL THK 5/16" OR GREATER ONLY)

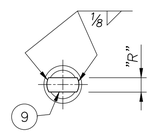


END CAP DETAIL

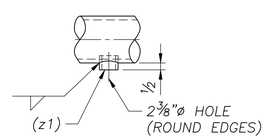


WIRE OUTLET DETAIL

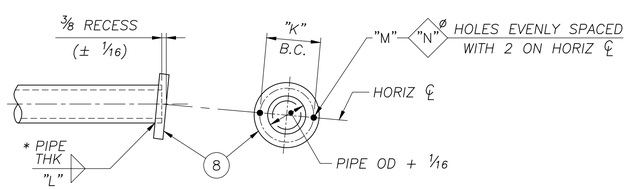


* NOTE: PIPE THK –1/16" FOR PIPE WALLS > 1/4"

FLANGE DETAIL

C3546–101

| PARTS PER CONT | PART MARK NO | NO. OF PIECES REQ'D | SECTION SYM | DESCRIPTION OF MATERIAL | LENGTH FEET | LENGTH INCHES | PARTS FOR ONE UNIT | |
|---|---|---|---|---|---|---|---|---|
| | 101T1 | 1 | | BOX TRUSS | | | | |
| | a | 2 | PIPE | 4.500 x .188 | 35 | 5 3/4 | | |
| | b | 2 | PIPE | 4.500 x .188 | 35 | 5 1/2 | | |
| | d | 4 | PIPE | 1.315 x .133 | 3 | 4 5/8 | | |
| | k | 4 | PIPE | 1.315 x .133 | 2 | 10 5/8 | | |
| | f | 18 | PIPE | 1.660 x .140 | 4 | 9 7/16 | | |
| | h | 18 | PIPE | 1.660 x .140 | 4 | 5 5/16 | | |
| | n | 5 | PIPE | 1.315 x .133 | 4 | 7 3/16 | | |
| | m | 4 | PL | 3/4 x 10 1/2 DIA. | – | – | | |
| | s | 4 | PL | 1/4 x 2 1/2 | 0 | 4 1/4 | | |
| | z1 | 1 | OP | 1 1/4" FORGED HALF CPLG (3000#) | – | – | | |
| | | | | | | | | |
| | 101T2 | 1 | | BOX TRUSS | | | | |
| | a | 2 | PIPE | 4.500 x .188 | 35 | 5 3/4 | | |
| | b | 2 | PIPE | 4.500 x .188 | 35 | 5 1/2 | | |
| | d | 4 | PIPE | 1.315 x .133 | 3 | 4 5/8 | | |
| | k | 4 | PIPE | 1.315 x .133 | 2 | 10 5/8 | | |
| | f | 18 | PIPE | 1.660 x .140 | 4 | 9 7/16 | | |
| | h | 18 | PIPE | 1.660 x .140 | 4 | 5 5/16 | | |
| | n | 5 | PIPE | 1.315 x .133 | 4 | 7 3/16 | | |
| | m | 4 | PL | 3/4 x 10 1/2 DIA. | – | – | | |
| | s | 4 | PL | 1/4 x 2 1/2 | 0 | 4 1/4 | | |
| | z1 | 2 | OP | 1 1/4" FORGED HALF CPLG (3000#) | – | – | | |

NOTE:

SEE GENERAL NOTES DRAWING FOR MATERIAL SPECIFICATIONS, FOUNDATION AND STANDARD NOTES

REF DWG: E15

OH–22

AASHTO 6th Edition Spec's

SEALED BY:




Oct 25 2023

walpar
A valmont COMPANY
POST OFFICE BOX 28650
BIRMINGHAM ALABAMA 35228
4200 JEFFERSON AVENUE
BIRMINGHAM ALABAMA 35221
PHONE (205)–925–4990
FAX (205) 925–7273

0

| | |
|---|---|
| STATE: | South Carolina |
| FED PROJ: | Carolina Crossroads Phase 1 & 2 |
| ST PROJ: | P039718 |
| COUNTY: | Lexington & Richland |
| ROUTE: | I–26 & I–126 |
| SUBJECT: | OVERHEAD SIGN SUPPORT<br>DETAIL OF TRUSS |
| FOR: | Archer–United Joint Venture |
| DRAWN BY: | DLK DATE: 10/4/23 |
| CHECKED BY: | DLJ DATE: 10/16/23 |
| DWG NO: | C3546–101 |

| NO: | REVISIONS | DATE | MADE | CHECKED |
|---|---|---|---|---|
| 0 | CHECK COMPLETE | 10/16/23 | DLK | DLJ |

NAME: E:\acad\JobsNPrg\3546\3546–101.dwg DATE: OCT 16, 2023 TIME: 4:20 AM dj706290

BTESDET

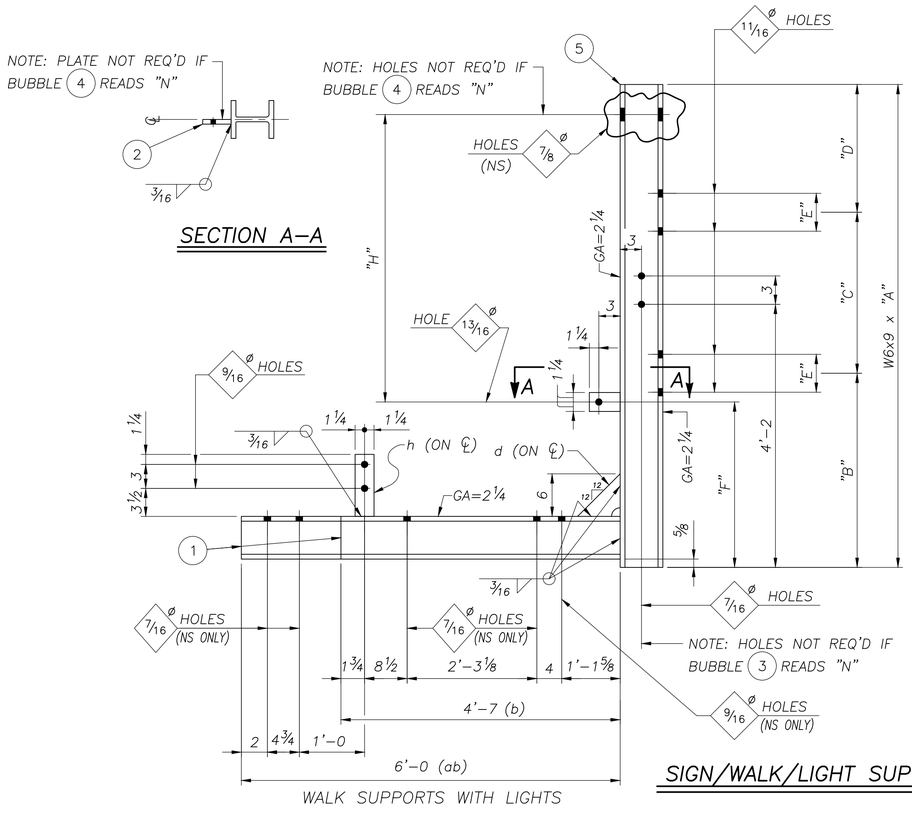


WALK SUPPORTS WITH LIGHTS

## SIGN/WALK/LIGHT SUPPORTS

| MARK | QTY | "A" | "B" | "C" | "D" | "E" | "F" | "H" | 1 | 2 | 3 | 4 | 5 |
|---|---|---|---|---|---|---|---|---|---|---|---|---|---|
| 102S1 | 1 | 9'–3½ | 5'–0½ | 3'–9 | 6 | 5⅛ | ---- | ---- | b | – | Y | N | a |
| 102S2 | 3 | 9'–3½ | 5'–0½ | 3'–9 | 6 | 5⅛ | ---- | ---- | b | – | N | N | aa |
| 102S3 | 2 | 9'–3½ | 5'–0½ | 3'–9 | 6 | 5⅛ | 2'–3¼ | 6'–0½ | ab | f | N | Y | ba |
| 102S4 | 1 | 10'–9½ | 5'–0½ | 3'–9 | 2'–0 | 5⅛ | 2'–3¼ | 8'–3 | ab | f | N | Y | da |
| 102S5 | 1 | 10'–9½ | 5'–0½ | 3'–9 | 2'–0 | 5⅛ | 2'–3¼ | 8'–3 | ab | f | Y | Y | fa |

1

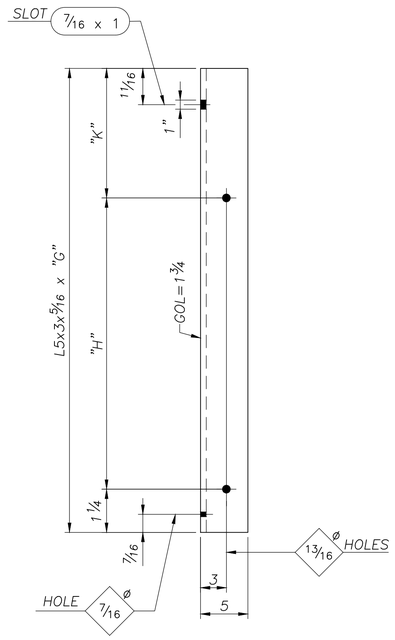


## SIGN HANGERS

| MARK | QTY | "G" | "H" | "K" |
|---|---|---|---|---|
| 102H1 | 2 | 9'–6¼ | 6'–0½ | 3'–4½ |
| 102H2 | 2 | 12'–6¼ | 8'–3 | 4'–2 |

| PARTS PER CONT | PART MARK NO | NO OF PIECES REQ'D | SECTION SYM | DESCRIPTION OF MATERIAL | LENGTH FEET | LENGTH INCHES | PARTS FOR ONE UNIT | |
|---|---|---|---|---|---|---|---|---|
| | 102S1 | 1 | | WALK SUPPORT | | | | |
| | a | 1 | W | 6 x 9 | 9 | 3½ | | |
| | b | 1 | W | 6 x 9 | 4 | 7 | | |
| | d | 1 | PL | 1/4 x 6 | 0 | 6 | | |
| | h | 1 | PL | 1/2 x 2 1/2 | 0 | 7¾ | | |
| | 102S2 | 3 | | WALK SUPPORTS | | | | |
| | aa | 3 | W | 6 x 9 | 9 | 3½ | | |
| | b | 3 | W | 6 x 9 | 4 | 7 | | |
| | d | 3 | PL | 1/4 x 6 | 0 | 6 | | |
| | h | 3 | PL | 1/2 x 2 1/2 | 0 | 7¾ | | |
| | 102S3 | 2 | | SIGN/WALK/LIGHT SUPPORTS | | | | |
| | ba | 2 | W | 6 x 9 | 9 | 3½ | | |
| | ab | 2 | W | 6 x 9 | 6 | 0 | | |
| | d | 2 | PL | 1/4 x 6 | 0 | 6 | | |
| | f | 2 | PL | 3/8 x 2 1/2 | 0 | 4¼ | | |
| | h | 2 | PL | 1/2 x 2 1/2 | 0 | 7¾ | | |
| | 102S4 | 1 | | SIGN/WALK/LIGHT SUPPORT | | | | |
| | da | 1 | W | 6 x 9 | 10 | 9½ | | |
| | ab | 1 | W | 6 x 9 | 6 | 0 | | |
| | d | 1 | PL | 1/4 x 6 | 0 | 6 | | |
| | f | 1 | PL | 3/8 x 2 1/2 | 0 | 4¼ | | |
| | h | 1 | PL | 1/2 x 2 1/2 | 0 | 7¾ | | |
| | 102S5 | 1 | | SIGN/WALK/LIGHT SUPPORT | | | | |
| | fa | 1 | W | 6 x 9 | 10 | 9½ | | |
| | ab | 1 | W | 6 x 9 | 6 | 0 | | |
| | d | 1 | PL | 1/4 x 6 | 0 | 6 | | |
| | f | 1 | PL | 3/8 x 2 1/2 | 0 | 4¼ | | |
| | h | 1 | PL | 1/2 x 2 1/2 | 0 | 7¾ | | |
| | | | | | | | | |
| | 102H1 | 2 | | SIGN HANGERS | | | | |
| | k | 2 | L | 5 x 3 x 5/16 | 9 | 6¼ | | |
| | 102H2 | 2 | | SIGN HANGERS | | | | |
| | ak | 2 | L | 5 x 3 x 5/16 | 12 | 6¼ | | |

C3546–102

**NOTE:**
SEE GENERAL NOTES DRAWING FOR MATERIAL SPECIFICATIONS, FOUNDATION AND STANDARD NOTES

REF DWG: E15

OH–22

AASHTO 6th Edition Spec's

SEALED BY:

SOUTH CAROLINA PROFESSIONAL ENGINEER
No. 38665
DAVID A LALLONE

Feb 7 2024

| NO: | REVISIONS | DATE | MADE | CHECKED |
|---|---|---|---|---|
| 1 | CORRECTED "D" DIMENSION | 2/6/24 | --- | DLJ |


walpar
A valmont COMPANY
POST OFFICE BOX 28650
BIRMINGHAM ALABAMA 35228
4200 JEFFERSON AVENUE
BIRMINGHAM ALABAMA 35221
PHONE (205)–925–4990
FAX (205) 925–7273


1

STATE: South Carolina
FED PROJ: Carolina Crossroads Phase 1 & 2
ST PROJ: P039718
COUNTY: Lexington & Richland
ROUTE: I–26 & I–126

SUBJECT: SIGN SUPPORT
WALK SUPPORT & SIGN HANGER DETAILS

FOR: Archer–United Joint Venture

DRAWN BY: DLK DATE: 10/4/23
CHECKED BY: DLJ DATE: 10/16/23

DWG NO: C3546–102

SH–DET4


NAME: E:\acad\JobsNPrg\3546\3546-102.dwg DATE: FEB 06, 2024 TIME: 1:39 PM dj706290